SOLANO COMMUNITY COLLEGE

AUTO TECH EXHAUST REPLACEMENT

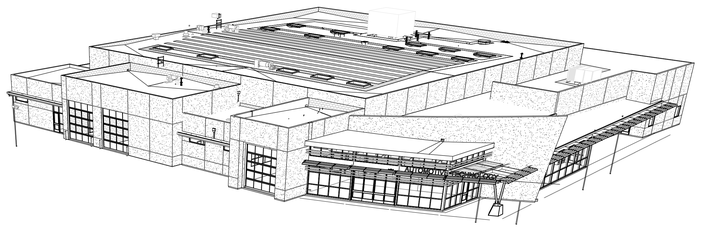

PROJECT DIRECTORY

PROJECT — **AUTO TECHNOLOGY FACILITY**
1687 Ascot Pkwy
Vallejo, CA 94591

OWNER — **SOLANO COMMUNITY COLLEGE**
4000 Suisun Valley Road
Fairfield, CA 94534

ARCHITECT — **JKAE**
11661 BLOCKER DR, SUITE 220
AUBURN, CA 95603
Chris Vicencio
530.888.0998

STRUCTURAL — **JKAE**
777 South Center Street, Suite 105
Reno, NV 89501
Colton Schaefer
775.512.8669

MECHANICAL — **LP Consulting Engineers**
1209 Pleasant Grove Blvd.
Roseville, CA 95678
Ryan Ennis
916.721.2907

ELECTRICAL — **LP Consulting Engineers**
1209 Pleasant Grove Blvd.
Roseville, CA 95678
Ryan Ennis
916.721.2907

SHEET INDEX

GENERAL
G0.1.1 TITLE SHEET / SHEET INDEX
G0.2.1 EXISTING BUILDING AREA ANALYSIS
G0.3.0 SITE CODE PLAN

ARCHITECTURAL
A2.1.1 FLOOR PLAN
A4.1.1 REFLECTED CEILING PLAN
A5.0.1 ROOF PLAN
A9.1.1 ROOF DETAILS

STRUCTURAL
S0.0.1 STRUCTURAL GENERAL NOTES & TYPICAL DETAIL.
S2.0.1 STRUCTURAL ROOF FRAMING PLAN

MECHANICAL
M0.0.1 MECHANICAL LEGEND AND NOTES
M0.0.2 MECHANICAL SCHEDULES
M2.0.1 MECHANICAL DEMO FLOOR PLAN
M2.1.1 MECHANICAL FLOOR PLAN
M5.0.0 MECHANICAL DEMO ROOF PLAN
M5.0.1 MECHANICAL ROOF PLAN
M9.0.1 MECHANICAL DETAILS

ELECTRICAL
E0.0.1 ELECTRICAL ABBRIVIATION , SHEET LIST & NOTES
E0.0.2 ELECTRICAL LEGEND
E2.0.1 ELECTRICAL DEMO POWER PLAN
E2.1.1 ELECTRICAL POWER PLAN
E5.0.1 ELECTRICAL ROOF PLAN
E7.0.1 ELECTRICAL FIXTURE & PANEL SCHEDULE
E8.0.1 ELECTRICAL DETAILS
E9.0.1 ELECTRICAL SPECIFICATION
E9.0.2 ELECTRICAL SPECIFICATIONS
Grand total: 25

LIST OF APPLICABLE CODES

2022 CALIFORNIA EXISTING BUILDING CODE (CEBC), PART 10, TITLE 24 CCR

2022 CALIFORNIA REFERENCED STANDARDS CODE, PART 12, TITLE 24 CCR

TITLE 19 CCR, PUBLIC SAFETY, STATE FIRE MARSHAL REGULATIONS

APPLICABLE STANDARDS

FOR A LIST OF APPLICABLE STANDARDS, INCLUDING CALIFORNIA AMENDMENTS TO THE NFPA STANDARDS, REFER TO CBC CHAPTER 35 AND CFC CHAPTER 80.

PARTIAL LIST OF APPLICABLE CODES

CONSTRUCTION SHALL BE DONE IN ACCORDANCE WITH:

2022 CALIFORNIA ADMINISTRATIVE CODE, C.C.R., TITLE 24, PART 1.

2022 CALIFORNIA BUILDING CODE (CBC), - C.C.R., TITLE 24, PART 2. (2021 INTERNATIONAL BUILDING CODE, VOLUMES 1-2, & 2022 CALIFORNIA AMENDMENTS)

2022 CALIFORNIA ELECTRICAL CODE (CEC), - C.C.R., TITLE 24, PART 3. (2020 NFPA 70, NATIONAL ELECTRICAL CODE, WITH CALIFORNIA AMENDMENTS)

2022 CALIFORNIA MECHANICAL CODE (CMC), - C.C.R., TITLE 24, PART 4. (2021 MECHANICAL CODE, WITH CALIFORNIA AMENDMENTS)

2022 CALIFORNIA PLUMBING CODE (CPC), - C.C.R., TITLE 24, PART 5. (2021 INTERNATIONAL PLUMBING CODE, WITH CALIFORNIA AMENDMENTS)

2022 CALIFORNIA ENERGY CODE (CEC), - C.C.R., TITLE 24, PART 6.

2022 CALIFORNIA FIRE CODE, C.C.R., TITLE 24, PART 9. (2021 INTERNATIONAL FIRE CODE, WITH CALIFORNIA AMENDMENTS)

2022 CALIFORNIA GREEN BUILDING STANDARDS CODE (CALGREEN), C.C.R., TITLE 24, PART 11.

2022 NFPA 13 STANDARD FOR THE INSTALLATION OF SPRINKLER SYSTEMS

2022 NFPA 72 NATIONAL FIRE ALARM AND SIGNALING CODE C.C.R., PUBLIC SAFETY CODE, TITLE 19, DIVISION 1, STATE FIRE MARSHAL REGULATIONS NOTES:

1. WORK AND MATERIALS SHALL BE IN FULL ACCORDANCE WITH THE REQUIREMENTS OF THESE CODES, INCLUDING REFERENCED STANDARDS WITHIN, AND APPLICABLE LOCAL ORDINANCES. WHERE CONTRACT DOCUMENTS EXCEED SUCH REQUIREMENTS, WITHOUT VIOLATING SUCH CODES, REGULATIONS AND ORDINANCES, CONTRACT DOCUMENTS TAKE PRECEDENCE. WHERE CODES CONFLICT, THE MORE STRINGENT REQUIREMENTS SHALL APPLY.
2. CONTRACTOR SHALL COMPLY W/CFC CH.33 FIRE SAFETY DURING DEMOLITION AND CONSTRUCTION

STATEMENT OF GENERAL CONFORMANCE

The drawings and/or specifications and/or calculations for the items listed in the sheet index, other than Architectural items have been prepared by other design professionals or consultants who are licensed and/or authorized to prepare such drawings in this state. It has been examined by me for:
1) Design intent and appears to meet the appropriate requirements of Title 24, California Code of Regulations and the project specifications and
2) Coordination with my plans and specifications and is acceptable for incorporation into the construction of this project.

The Statement of General Conformance "shall not be construed as relieving me of my rights, duties and responsibilities under sections 17302 and 81138 of the Education Code and sections 4-336, 4-341 and 4-344 of Title 24, Part 1 (Title 24, Part 1, section 4-317(b))

SIGNATURE OF THE ARCHITECT — 9/30/2024 DATE
CHRIS VICENCIO AIA, PARTNER, JK ARCHITECTURE

C26985 — 6/25/30
LICENSE NUMBER — EXPIRATION

SCOPE OF WORK

REPLACEMENT OF EXISTING EXHAUST FANS AT 3 LOCATIONS. ADDITION OF FUEL CELL VENT (VENT ONLY). AT EXISTING AUTOMOTIVE TECHNOLOGY FACILITY.

- EXISTING FACILITY DSA APPLICATION NUMBER 02-114995. EXISTING PROJECT IS CERTIFIED.
- ACCESS UPGRADES FOR THIS BUILDING ARE NON APPLICABLE PER CBC 11B-202.4 EXCEPTION 7.

PROJECT INSPECTOR

A "DSA CERTIFIED" INSPECTOR OF RECORD (IOR) SHALL BE EMPLOYED BY THE OWNER AND APPROVED BY THE DIVISION OF THE STATE ARCHITECT (DSA). DUTIES AND REQUIRED IOR CLASSIFICATION PER SECTION 4-342, TITLE 24, PART 1 CCR AND IR A-7: CLASS 2 CERTIFIED BY DSA.

DEFERRED APPROVAL ITEMS

INSTALLATION OF DEFERRED APPROVAL ITEMS SHALL NOT BE STARTED UNTIL CONTRACTOR'S DRAWINGS, SPECIFICATIONS AND ENGINEERING CALCULATIONS FOR THE ACTUAL SYSTEMS TO BE INSTALLED HAVE BEEN ACCEPTED AND SIGNED BY THE ARCHITECT OR STRUCTURAL ENGINEER WHO HAS BEEN DELEGATED THE RESPONSIBILITY OF COVERING THE WORK SHOWN ON A PARTICULAR PLAN OR SPECIFICATION, AND APPROVED BY THE DIVISION OF THE STATE ARCHITECT. DEFERRED ITEMS SHALL BE COMPLETED PRIOR TO OCCUPANCY OF BUILDINGS AFFECTED BY THE DEFERRED WORK.

CHANGES TO THE APPROVED DRAWINGS AND SPECIFICATIONS SHALL BE MADE BY AN ADDENDA OR A CHANGE ORDER APPROVED BY THE DIVISION OF THE STATE ARCHITECT, AS REQUIRED BY SECTION 4-338, PART 1, TITLE 24, C.C.R.

WORK SHALL CONFORM TO TITLE 24, CALIFORNIA CODE OF REGULATIONS (CCR).

There will be no Deferred Submittals for this project.

VICINITY MAP NOT TO SCALE

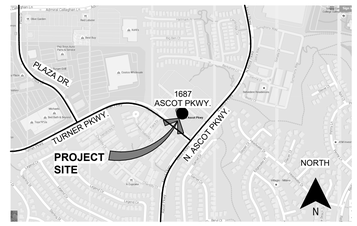

IDENTIFICATION STAMP
DIV. OF THE STATE ARCHITECT
APP. 02-122544 INC:
REVIEWED FOR
SS ☐ FLS ☐ ACS ☐
DATE: 09/09/2024

JKAE
architecture + interiors + engineering

GENERAL NOTES

1. ALL WORK SHALL CONFORM TO 2022 TITLE 24, CALIFORNIA CODE OF REGULATIONS (CCR).
2. CHANGES TO THE APPROVED DRAWINGS AND SPECIFICATIONS SHALL BE MADE BY AN ADDENDUM OR A CONSTRUCTION CHANGE DOCUMENT (CCD) APPROVED BY THE DIVISION OF THE STATE ARCHITECT, AS REQUIRED BY SECTION 4-338, PART 1, TITLE 24, CCR.
3. A "DSA CERTIFIED" PROJECT INSPECTOR EMPLOYED BY THE DISTRICT (OWNER) AND APPROVED BY THE DSA SHALL PROVIDE CONTINUOUS INSPECTION OF THE WORK. THE DUTIES OF THE INSPECTOR ARE DEFINED IN SECTION 4-342,PART 1, TITLE 24, CCR. A MINIMUM CLASS 2 INSPECTOR IS REQUIRED.
4. A DSA ACCEPTED TESTING LABORATORY DIRECTLY EMPLOYED BY THE DISTRICT (OWNER) SHALL CONDUCT ALL THE REQUIRED TESTS AND INSPECTIONS FOR THE PROJECT.
5. THE INTENT OF THESE DRAWINGS AND SPECIFICATIONS IS THAT THE WORK OF THE ALTERATION, REHABILITATION OR RECONSTRUCTION IS TO BE IN ACCORDANCE WITH TITLE 24, CCR. SHOULD ANY EXISTING CONDITIONS SUCH AS DETERIORATION OR NON-COMPLYING CONSTRUCTION BE DISCOVERED WHICH IS NOT COVERED BY THE CONTRACT DOCUMENTS WHEREIN THE FINISHED WORK WILL NOT COMPLY WITH TITLE 24, CCR, A CONSTRUCTION CHANGE DOCUMENT (CCD), OR A SEPARATE SET OF PLANS AND SPECIFICATIONS, DETAILING AND SPECIFYING THE REQUIRED WORK SHALL BE SUBMITTED TO AND APPROVED BY DSA BEFORE PROCEEDING WITH THE WORK. (SECTION 4-317(C), PART 1, TITLE 24, CCR).
6. SUBSTITUTIONS AFFECTING DSA-REGULATED ITEMS SHALL BE CONSIDERED AS A CONSTRUCTION CHANGE DOCUMENTS (CCD) OR ADDENDA, AND SHALL BE SUBMITTED TO AND APPROVED BY PRIOR TO FABRICATION AND INSTALLATION PER DSA IR A-6 AND SECTION 338(c) PART 1, TITLE 24 CCR.

SEAL



DSA #: 02-122544

Project: SOLANO COMMUNITY COLLEGE — AUTO TECH EXHAUST REPLACEMENT

Drawing Title: TITLE SHEET / SHEET INDEX

Drawn By: FH
Checked By: SP

NO.	DATE	ISSUE

Project No.: 23-265
@Date: 02/19/2024

DRAWING NO.: G0.1.1

Drawings and specifications prepared by JKAE and consultants are for use solely with respect to this project. JKAE and consultants are deemed the authors and owners of these documents and shall retain all common law, statutory and other reserved rights, including copyrights. These documents shall not be used by the owner for future additions or alterations to this project or for other projects without the prior written agreement of JKAE. Any unauthorized use of these documents shall be at the Owner's sole risk and without liability to JKAE and consultants.

8/30/2024 12:05:44 PM
J:\Projects\2023\23-265 Autech Exhaust Replacement\23-265 Autech Exhaust Replacement.rvt
ARCH1v4



2 MEZZANINE (STORAGE)
1/8" = 1'-0"

1 BUILDING AREA ANALYSIS
1/8" = 1'-0"

Drawings and specifications prepared by JKAE and consultants are for use solely with respect to this project. JKAE and consultants are deemed the authors and owners of these documents and shall retain all common law, statutory and other reserved rights, including copyrights. These documents shall not be used by the owner for future additions or alterations to this project or for other projects without the prior written agreement of JKAE. Any unauthorized use of these documents shall be at the Owner's sole risk and without liability to JKAE and consultants
Architect
License No. C-30965
8/30/2024 12:05:48 PM
A0C1.vt4

IDENTIFICATION STAMP
DIV. OF THE STATE ARCHITECT
APP. 02-122544 INC:
REVIEWED FOR
SS ☐ FLS ☐ ACS ☐
DATE: 09/09/2024

JKAE
architecture + interiors + engineering

PROJECT:	EXISTING AUTOMOTIVE TECHINCAL BUILDING
LOCATION:	1691 ASCOT PARKWAY, VALLEJO, CA 94591
OWNER:	SOLANO COMMUNITY COLLEGE DISTRICT
BUILDING CODE:	2013 CALIFORNIA BUILDING CODE
OCCUPANCIES:	
MAJOR:	B
MINOR:	S1 AND A3
CONSTRUCTION TYPE:	VB
SPRINKLERS:	YES
BUILDING AREA:	35845 SF

NOTE: CODE ANALYSIS FROM PREVIOUS CODE ANALYSIS DSA APPLICATION NUMBER 02-114995

NOTES

1. SEE SHEET G0.3 FOR ASSUMED AND REAL PROPERTY LINES USE FOR AREA INCREASE CALCULATIONS.

REMARKS

(1) CBC TABLE 601 (Note e) FIRE-RESISTANCE RATING REQUIREMENTS FOR BUILDING ELEMENTS
(2) CBC TABLE 1018.1 CORRIDOR FIRE-RESISTANCE RATING
(3) CBC TABLE 503 ALLOWABLE HEIGHT AND BUILDING AREAS
(4) CBC SECTION 504.2 AUTOMATIC SPRINKLER SYSTEM INCREASE
(5) CBC SECTION 506.2 FRONTAGE INCREASE
(6) CBC SECTION 506.3 AUTOMATIC SPRINKLER SYSTEM INCREASE
(7) CBC SECTION 506.4 AREA DETERMINATION
(8) CBC SECTION 502.1 "AREA, BUILDING" DEFINED
(9) CBC SECTION 506.1 AREA MODIFICATIONS PER EQUATION 5-1
(10) CBC SECTION 508.4.2 ALLOWABLE AREA OF SEPARATED OCCUPANCIES
(11) SEE SHEET G0.1.1 FOR CODE EDITION
(12) CONTROL AREA 2 INCLUDES WHOLE BLDG. EXCEPT AREA 1
(13) CONTROL AREA OCCUPANCY INVENTORY FORM FILED WITH FIRE SPRINKLER CALCULATIONS FILING.

LEGEND

(E) 1 HR OCCUPANCY SEPARATION

SEAL

LICENSED ARCHITECT
CHRISTOPHER C. VOLKERS
NO. C-30965
REN. 6-30-25
STATE OF CALIFORNIA

DSA #: 02-122544

Project
SOLANO COMMUNITY COLLEGE
AUTO TECH EXHAUST REPLACEMENT

Drawing Title
EXISTING BUILDING AREA ANALYSIS

Drawn By: FH
Checked By: SP

NO.	DATE	ISSUE

Project No.: 23-265
©Date: 02/19/2024

DRAWING NO.
G0.2.1

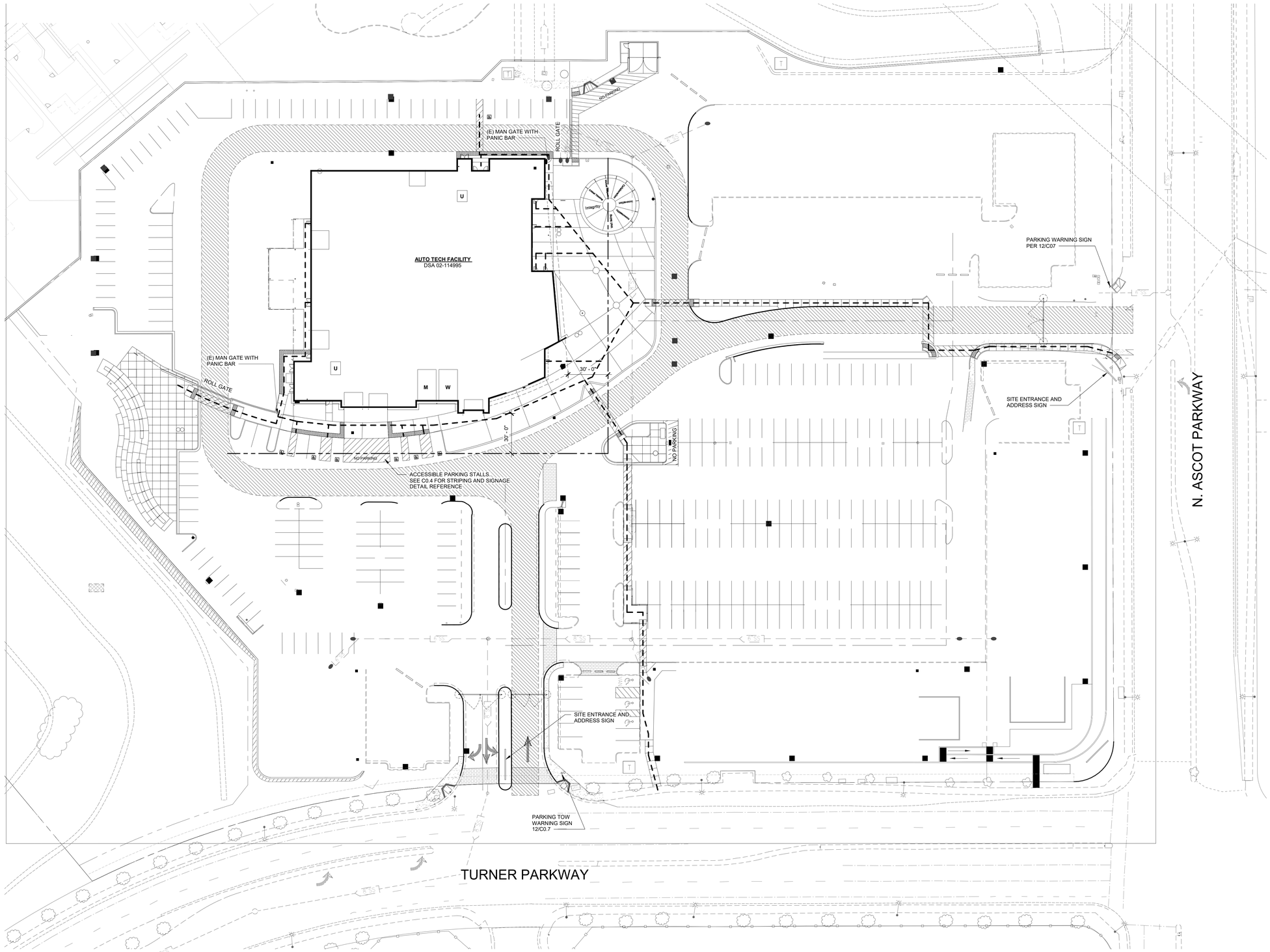

1 ACCESSIBILITY / SIGNAGE SITE PLAN
1" = 30'-0"

PLAN NORTH N

IDENTIFICATION STAMP
DIV. OF THE STATE ARCHITECT
APP. 02-122544 INC:
REVIEWED FOR
SS ☐ FLS ☐ ACS ☐
DATE: 09/09/2024

JKAE
architecture + interiors + engineering

NOTE: CODE ANALYSIS FROM PREVIOUS CODE ANALYSIS DSA APPLICATION NUMBER 02-114995

LEGEND

U - UNISEX
M - MENS RESTROOM
W - WOMENS RESTROOM

PARKING CALCULATION

NUMBER OF PARKING STALLS = 290
ACCESSIBLE REQUIRED = 7
ACCESSIBLE PROVIDED = 5 REGULAR AND 2 VAN

ACCESSIBILTY NOTES

1. PATH OF TRAVEL (P.O.T.) AS INDICATED IS A BARRIER FREE ACCESS WITHOUT ANY ABRUPT VERTICAL CHANGES EXCEEDING 1/2" BEVELED AT 1:2 MAXIMUM SLOPE, EXCEPT THAT LEVEL CHANGES DO NOT EXCEED 1/4" VERTICAL AND IS AT LEAST 48" WIDE. SURFACE IS SLIP RESISTANT, STABLE, FIRM, AND SMOOTH. CROSS-SLOPE DOES NOT EXCEED 2% AND SLOPE IN THE DIRECTION OF TRAVEL IS LESS THAN 5% UNLESS OTHERWISE INDICATED. (P.O.T.) SHALL MAINTAIN FREE OF OVERHANGING OBSTRUCTIONS TO 80" MINIMUM (11B-307.4) AND PROTRUDING OBJECTS GREATER THAN 4" PROJECTION FROM THE WALL AND ABOVE 27" AND LESS THAN 80" (11B-307.2). CONTRACTOR TO VERIFY THAT ALL BARRIERS IN THE PATH OF TRAVEL HAVE BEEN REMOVED OR WILL BE REMOVED UNDER THIS PROJECT, AND PATH OF TRAVEL COMPLIES WITH CBC 11B-206.

2. PROVIDE SITE DIRECTIONAL ACCESSIBLE ROUTE SIGNAGE (SDS-1) AT ALL MAJOR JUNCTIONS PER CBC SEC. 11B-703.

3. SEE DETAIL A1.1.1 FOR FENCE GATE INFORMATION

DESIGN PROFESSIONAL IN GENERAL RESPONSIBLE CHARGE STATEMENT: THE POT IDENTIFIED IN THESE CONSTRUCTION DOCUMENTS IS COMPLIANT WITH THE CURRENT APPLICABLE CALIFORNIA BUILDING CODE ACCESSIBILITY PROVISIONS FOR **PATH OF TRAVEL REQUIREMENTS FOR ALTERATIONS, ADDITIONS AND STRUCTURAL REPAIRS**. AS PART OF THE DESIGN OF THIS PROJECT, THE POT WAS EXAMINED AND ANY ELEMENTS, COMPONENTS OR PORTIONS OF THE POT THAT WERE DETERMINED TO BE NONCOMPLIANT 1) HAVE BEEN IDENTIFIED AND 2) THE CORRECTIVE WORK NECESSARY TO BRING THEM INTO COMPLIANCE HAS BEEN INCLUDED WITHIN THE SCOPE OF THIS PROJECT'S WORK THROUGH DETAILS, DRAWINGS AND SPECIFICATIONS INCORPORATED INTO THESE CONSTRUCTION DOCUMENTS. ANY NONCOMPLIANT ELEMENTS, COMPONENTS OR PORTIONS OF THE POT THAT WILL NOT BE CORRECTED BY THIS PROJECT BASED ON VALUATION THRESHOLD LIMITATIONS OR A FINDING OF UNREASONABLE HARDSHIP ARE SO INDICATED IN THESE CONSTRUCTION DOCUMENTS.
DURING CONSTRUCTION, IF POT ITEMS WITHIN THE SCOPE OF THE PROJECT REPRESENTED AS CODE COMPLIANT ARE FOUND TO BE NONCONFORMING BEYOND REASONABLE CONSTRUCTION TOLERANCES, THEY SHALL BE BROUGHT INTO COMPLIANCE WITH THE CBC AS A PART OF THIS PROJECT BY MEANS OF A CONSTRUCTION CHANGE DOCUMENT."

LEGEND

ASSUMED OR REAL PROPERTY LINE

ACCESSIBLE PATH OF TRAVEL 4'-0" WIDE MIN. CONCRETE OR A.C. PAVED. SEE CIVIL DRAWINGS FOR ADDITIONAL INFORMATION ON MATERIAL, SLOPES AND ELEVATIONS.

EXISTING FIRE LANE - 20'-0" WIDE

SEAL

LICENSED ARCHITECT
CHRISTOPHER C. CORDOVA
NO. C26985
REN. 8-30-25
STATE OF CALIFORNIA

DSA #: 02-122544

Project
SOLANO COMMUNITY COLLEGE
AUTO TECH EXHAUST REPLACEMENT

Drawing Title
SITE CODE PLAN

Drawn By: BR
Checked By: SP
Project No.: 23-265
@Date: 02/19/2024
DRAWING NO.: G0.3.0

NO.	DATE	ISSUE

Drawings and specifications prepared by JKAE and consultants are for use solely with respect to this project. JKAE and consultants are deemed the authors and owners of these documents and shall retain all common law, statutory and other reserved rights, including copyrights. These documents shall not be used by the owner for future additions or alterations to this project or for other projects without the prior written agreement of JKAE. Any unauthorized use of these documents shall be at the Owner's sole risk and without liability to JKAE and consultants
8/30/2024 12:26:49 PM
J:\JOBS\K Docs\23-265 Autotech Exhaust Replacement\23-265 Autotech Exhaust Replacement_ARCH.rvt

Drawings and specifications prepared by JKAE and consultants are for use solely with respect to this project. JKAE and consultants are deemed the authors and owners of these documents and shall retain all common law, statutory and other reserved rights, including copyrights. These documents shall not be used by the owner for future additions or alterations to this project or for other projects without the prior written agreement of JKAE. Any unauthorized use of these documents shall be at the Owner's sole risk and without liability to JKAE and consultants
8/30/2024 12:05:51 PM
ARCHIVE
Autotech Docs\23-265 Autotech Exhaust Replacement\23-265 Autotech Exhaust Replacement -
ARCH.rvt

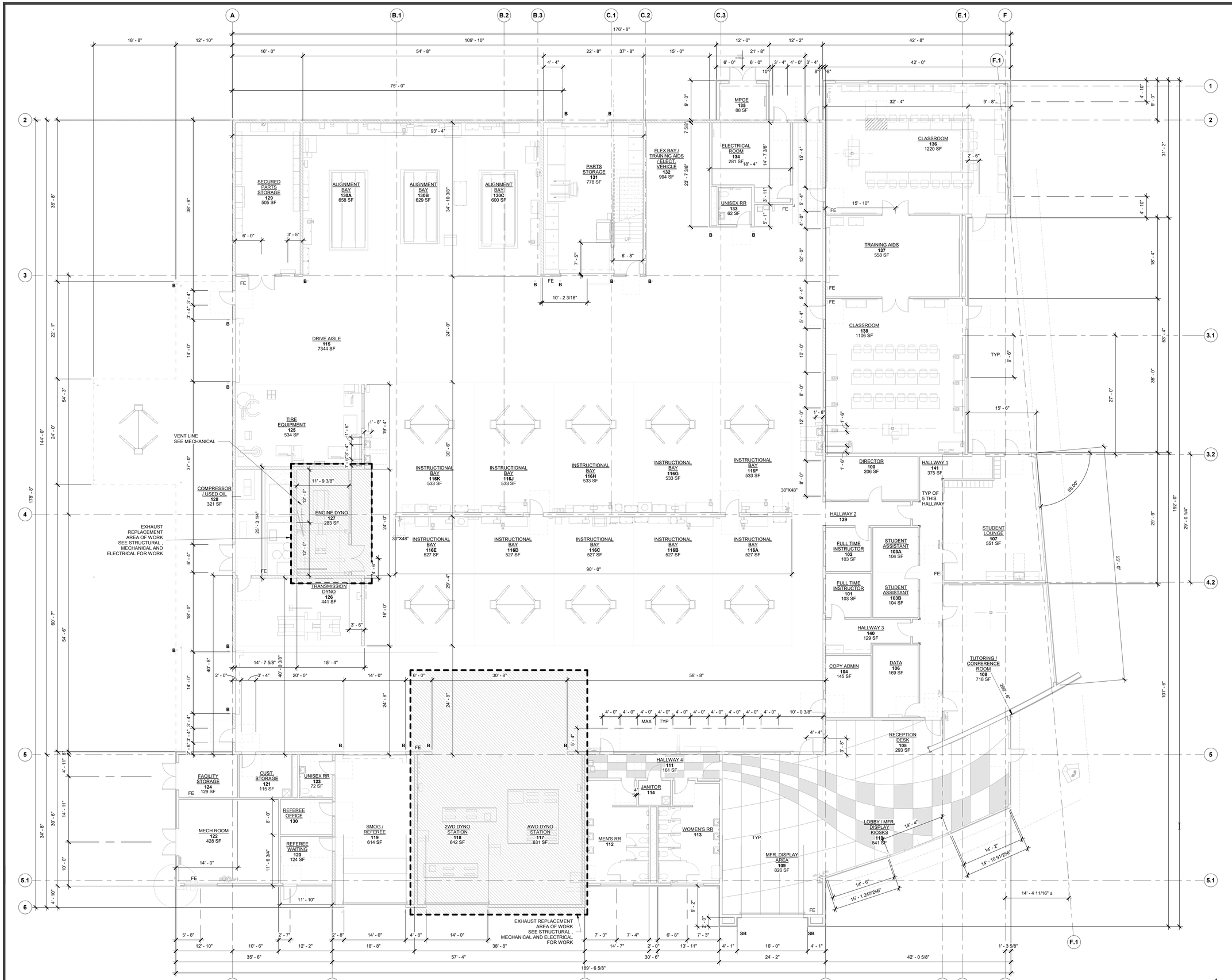

IDENTIFICATION STAMP
DIV. OF THE STATE ARCHITECT
APP. 02-122544 INC:
REVIEWED FOR
SS ☐ FLS ☐ ACS ☐
DATE: 09/09/2024

JKAE
architecture + interiors + engineering

FLOOR PLAN LEGEND

FE	(E)FIRE EXTINGUISHER
	(E) IMPACT RESISTANT GYPSUM BOARD
	(E)NON-RATED PARTITION
	(E) 1 HOUR RATED PARTITION
	(E) 8" CMU PARTITION

GENERAL NOTES

1. FIRST FLOOR FINISH FLOOR IS 0'-0" = 266.33'

GENERAL NOTES

1. ALL WORK SHALL CONFORM TO 2022 TITLE 24, CALIFORNIA CODE OF REGULATIONS (CCR).
2. CHANGES TO THE APPROVED DRAWINGS AND SPECIFICATIONS SHALL BE MADE BY AN ADDENDUM OR A CONSTRUCTION CHANGE DOCUMENT (CCD) APPROVED BY THE DIVISION OF THE STATE ARCHITECT, AS REQUIRED BY SECTION 4-338, PART 1, TITLE 24, CCR.
3. A "DSA CERTIFIED" PROJECT INSPECTOR EMPLOYED BY THE DISTRICT (OWNER) AND APPROVED BY THE DSA SHALL PROVIDE CONTINUOUS INSPECTION OF THE WORK. THE DUTIES OF THE INSPECTOR ARE DEFINED IN SECTION 4-342,PART 1, TITLE 24, CCR. A MINIMUM CLASS 2 INSPECTOR IS REQUIRED.
4. A DSA ACCEPTED TESTING LABORATORY DIRECTLY EMPLOYED BY THE DISTRICT (OWNER) SHALL CONDUCT ALL THE REQUIRED TESTS AND INSPECTIONS FOR THE PROJECT.
5. THE INTENT OF THESE DRAWINGS AND SPECIFICATIONS IS THAT THE WORK OF THE ALTERATION, REHABILITATION OR RECONSTRUCTION IS TO BE IN ACCORDANCE WITH TITLE 24, CCR. SHOULD ANY EXISTING CONDITIONS SUCH AS DETERIORATION OR NON-COMPLYING CONSTRUCTION BE DISCOVERED WHICH IS NOT COVERED BY THE CONTRACT DOCUMENTS WHEREIN THE FINISHED WORK WILL NOT COMPLY WITH TITLE 24, CCR, A CONSTRUCTION CHANGE DOCUMENT (CCD), OR A SEPARATE SET OF PLANS AND SPECIFICATIONS, DETAILING AND SPECIFYING THE REQUIRED WORK SHALL BE SUBMITTED TO AND APPROVED BY DSA BEFORE PROCEEDING WITH THE WORK. (SECTION 4-317(C), PART 1, TITLE 24, CCR).
6. SUBSTITUTIONS AFFECTING DSA-REGULATED ITEMS SHALL BE CONSIDERED AS A CONSTRUCTION CHANGE DOCUMENTS (CCD) OR ADDENDA, AND SHALL BE SUBMITTED TO AND APPROVED BY PRIOR TO FABRICATION AND INSTALLATION PER DSA IR A-6 AND SECTION 338(c) PART 1, TITLE 24 CCR.

SEAL

LICENSED ARCHITECT
CHRISTOPHER C. VICKERY
NO. C26985
REN. 6-30-25
STATE OF CALIFORNIA

DSA #: 02-122544

Project
SOLANO COMMUNITY COLLEGE
AUTO TECH EXHAUST REPLACEMENT

Drawing Title
FLOOR PLAN

Drawn By: FH
Checked By: SP

NO.	DATE	ISSUE

Project No.: 23-265
©Date: 02/19/2024
DRAWING NO.
A2.1.1

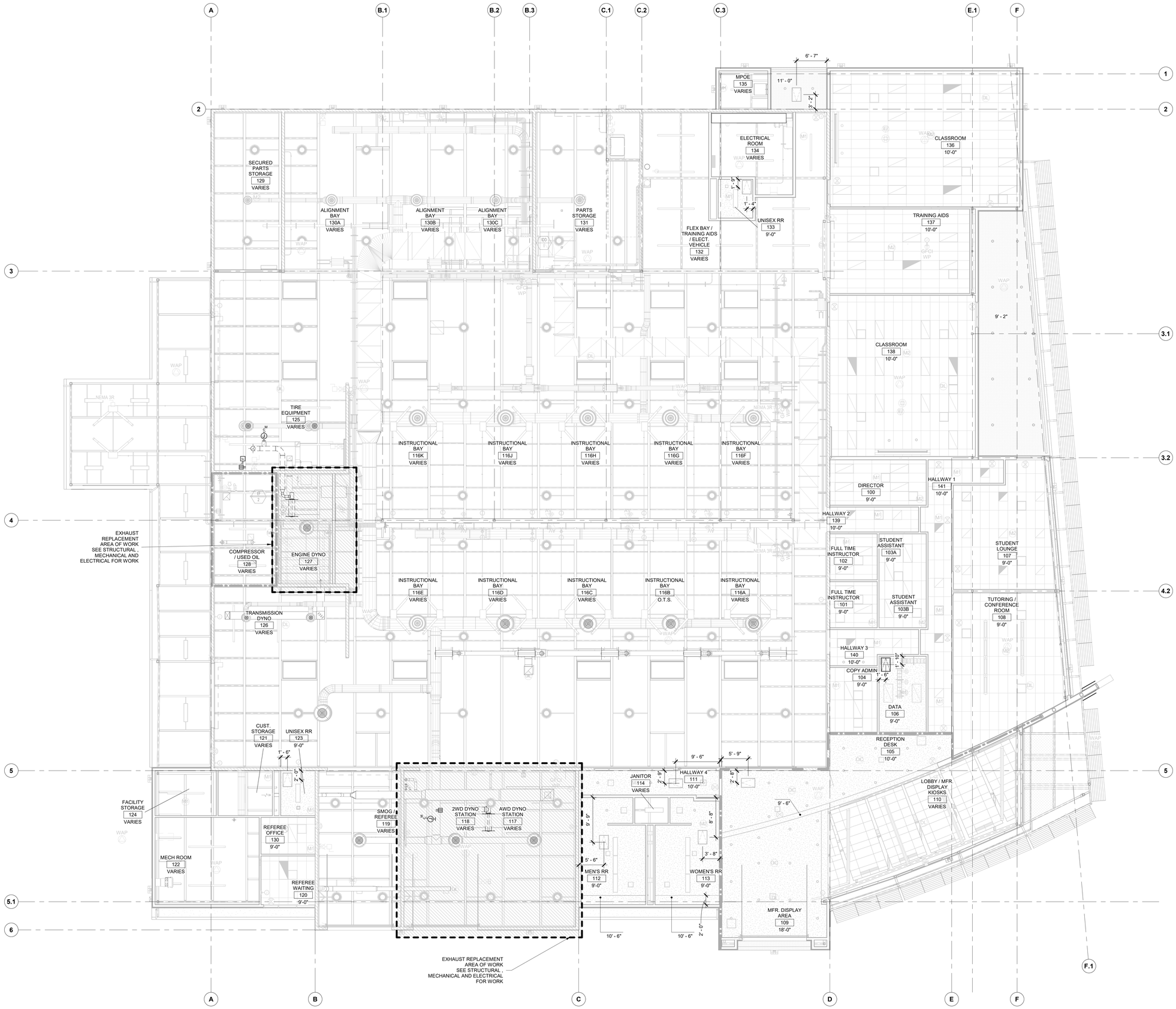
A
B.1
B.2
B.3
C.1
C.2
C.3
E.1
F
1
2
3
3.1
3.2
4
4.2
5
5.1
6
F.1
MPOE
135
VARIES
6' - 7"
11' - 0"
5' - 2"
ELECTRICAL ROOM
134
VARIES
CLASSROOM
136
10'-0"
SECURED PARTS STORAGE
129
VARIES
ALIGNMENT BAY
130A
VARIES
ALIGNMENT BAY
130B
VARIES
ALIGNMENT BAY
130C
VARIES
PARTS STORAGE
131
VARIES
FLEX BAY / TRAINING AIDS / ELECT. VEHICLE
132
VARIES
5' - 1"
1' - 4"
UNISEX RR
133
9'-0"
TRAINING AIDS
137
10'-0"
9' - 2"
CLASSROOM
138
10'-0"
TIRE EQUIPMENT
125
VARIES
INSTRUCTIONAL BAY
116K
VARIES
INSTRUCTIONAL BAY
116J
VARIES
INSTRUCTIONAL BAY
116H
VARIES
INSTRUCTIONAL BAY
116G
VARIES
INSTRUCTIONAL BAY
116F
VARIES
DIRECTOR
100
9'-0"
HALLWAY 1
141
10'-0"
HALLWAY 2
139
10'-0"
EXHAUST REPLACEMENT AREA OF WORK SEE STRUCTURAL , MECHANICAL AND ELECTRICAL FOR WORK
COMPRESSOR / USED OIL
128
VARIES
ENGINE DYNO
127
VARIES
FULL TIME INSTRUCTOR
102
9'-0"
STUDENT ASSISTANT
103A
9'-0"
STUDENT LOUNGE
107
9'-0"
INSTRUCTIONAL BAY
116E
VARIES
INSTRUCTIONAL BAY
116D
VARIES
INSTRUCTIONAL BAY
116C
VARIES
INSTRUCTIONAL BAY
116B
O.T.S.
INSTRUCTIONAL BAY
116A
VARIES
TRANSMISSION DYNO
126
VARIES
FULL TIME INSTRUCTOR
101
9'-0"
STUDENT ASSISTANT
103B
9'-0"
TUTORING / CONFERENCE ROOM
108
9'-0"
HALLWAY 3
140
10'-0"
1' - 10"
COPY ADMIN
104
9'-0"
1' - 6"
DATA
106
9'-0"
CUST. STORAGE
121
VARIES
UNISEX RR
123
9'-0"
1' - 6"
RECEPTION DESK
105
10'-0"
9' - 6"
5' - 9"
JANITOR
114
VARIES
HALLWAY 4
111
10'-0"
LOBBY / MFR. DISPLAY / KIOSKS
110
VARIES
FACILITY STORAGE
124
VARIES
SMOG / REFEREE
119
VARIES
2WD DYNO STATION
118
VARIES
AWD DYNO STATION
117
VARIES
REFEREE OFFICE
130
9'-0"
MECH ROOM
122
VARIES
REFEREE WAITING
120
9'-0"
MEN'S RR
112
9'-0"
WOMEN'S RR
113
9'-0"
3' - 8"
10' - 6"
2' - 0"
MFR. DISPLAY AREA
109
18'-0"
EXHAUST REPLACEMENT AREA OF WORK SEE STRUCTURAL , MECHANICAL AND ELECTRICAL FOR WORK
NEMA 3R
WAP
GFCI
WP
DL
M1
M2
A1
A2
A3
A4
A5
A6
A7
A8
A9
A10
A11
A12
A13
A14
A15
A16
A17
A18
A19
A20
A21
A22
A23
A24
A25
A26
A27
A28
A29
A30
A31
A32
A33
A34
A35
A36
A37
A38
A39
A40

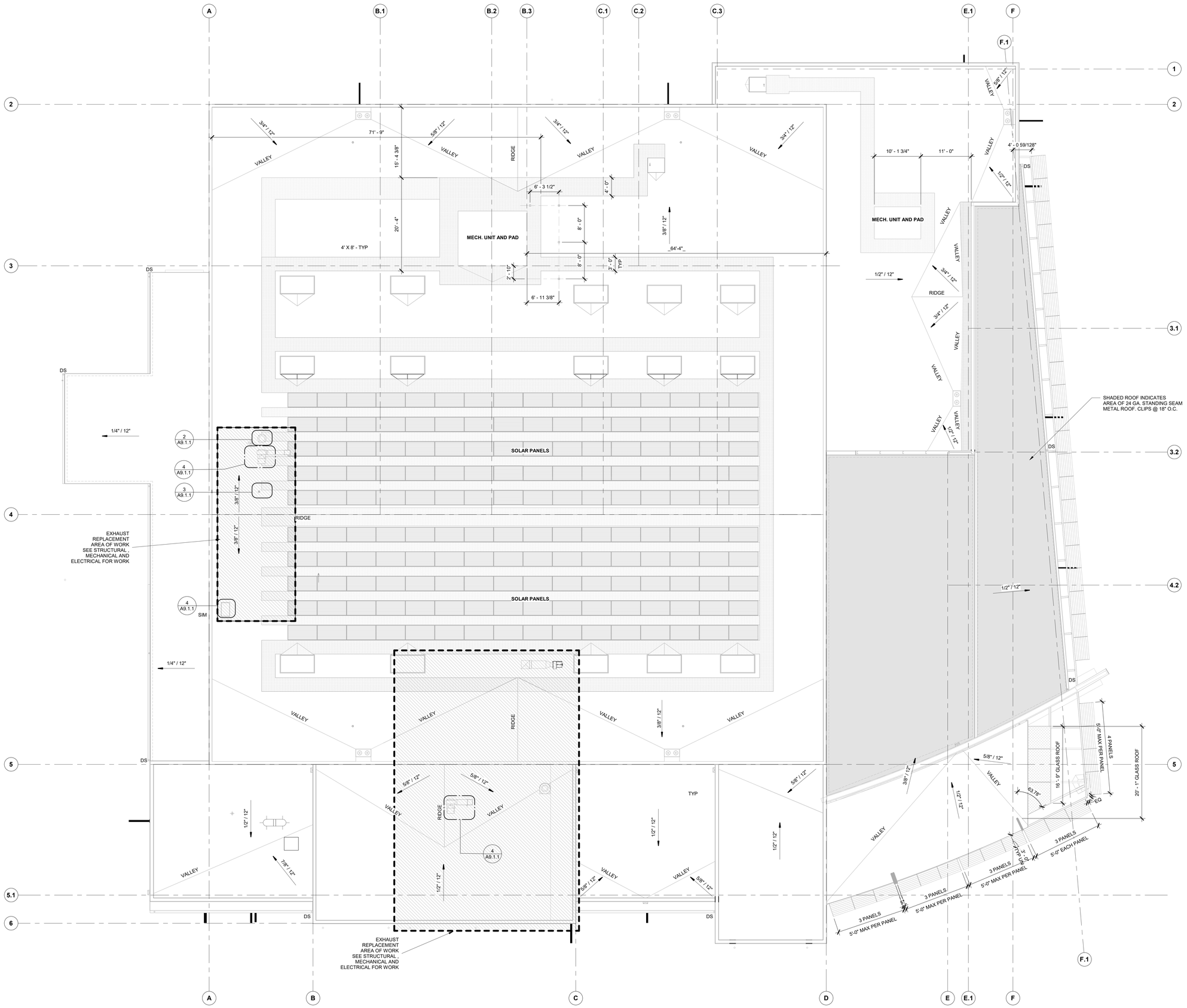

ROOF PLAN

1/8" = 1'-0"

Drawings and specifications prepared by JKAE and consultants are for use solely with respect to this project. JKAE and consultants are deemed the authors and owners of these documents and shall retain all common law, statutory and other reserved rights, including copyrights. These documents shall not be used by the owner for future additions or alterations to this project or for other projects without the prior written agreement of JKAE. Any unauthorized use of these documents shall be at the Owner's sole risk and without liability to JKAE and consultants
Archive Docs/23-265 Auttech Exhaust Replacement/23-265 Auttech Exhaust Replacement
AR25.rvt
8/30/2024 12:06:24 PM

IDENTIFICATION STAMP
DIV. OF THE STATE ARCHITECT
APP. 02-122544 INC:
REVIEWED FOR
SS ☐ FLS ☐ ACS ☐
DATE: 09/09/2024

JKAE
architecture + interiors + engineering

GENERAL NOTES

1. ALL WORK SHALL CONFORM TO 2022 TITLE 24, CALIFORNIA CODE OF REGULATIONS (CCR).
2. CHANGES TO THE APPROVED DRAWINGS AND SPECIFICATIONS SHALL BE MADE BY AN ADDENDUM OR A CONSTRUCTION CHANGE DOCUMENT (CCD) APPROVED BY THE DIVISION OF THE STATE ARCHITECT, AS REQUIRED BY SECTION 4-338, PART 1, TITLE 24, CCR.
3. A "DSA CERTIFIED" PROJECT INSPECTOR EMPLOYED BY THE DISTRICT (OWNER) AND APPROVED BY THE DSA SHALL PROVIDE CONTINUOUS INSPECTION OF THE WORK. THE DUTIES OF THE INSPECTOR ARE DEFINED IN SECTION 4-342,PART 1, TITLE 24, CCR. A MINIMUM CLASS 2 INSPECTOR IS REQUIRED.
4. A DSA ACCEPTED TESTING LABORATORY DIRECTLY EMPLOYED BY THE DISTRICT (OWNER) SHALL CONDUCT ALL THE REQUIRED TESTS AND INSPECTIONS FOR THE PROJECT.
5. THE INTENT OF THESE DRAWINGS AND SPECIFICATIONS IS THAT THE WORK OF THE ALTERATION, REHABILITATION OR RECONSTRUCTION IS TO BE IN ACCORDANCE WITH TITLE 24, CCR. SHOULD ANY EXISTING CONDITIONS SUCH AS DETERIORATION OR NON-COMPLYING CONSTRUCTION BE DISCOVERED WHICH IS NOT COVERED BY THE CONTRACT DOCUMENTS WHEREIN THE FINISHED WORK WILL NOT COMPLY WITH TITLE 24, CCR, A CONSTRUCTION CHANGE DOCUMENT (CCD), OR A SEPARATE SET OF PLANS AND SPECIFICATIONS, DETAILING AND SPECIFYING THE REQUIRED WORK SHALL BE SUBMITTED TO AND APPROVED BY DSA BEFORE PROCEEDING WITH THE WORK. (SECTION 4-317(C), PART 1, TITLE 24, CCR).
6. SUBSTITUTIONS AFFECTING DSA-REGULATED ITEMS SHALL BE CONSIDERED AS A CONSTRUCTION CHANGE DOCUMENTS (CCD) OR ADDENDA, AND SHALL BE SUBMITTED TO AND APPROVED BY PRIOR TO FABRICATION AND INSTALLATION PER DSA IR A-6 AND SECTION 338(c) PART 1, TITLE 24 CCR.

LEGEND

- DS — (E)DOWN SPOUT
- (E)AREA OF WALKWAY PROTECTION PAD
- (E)GLASS ROOF - 08 81 00
- (E)TPO ROOFING OVER COVER BOARD OVER 5 1/2" RIGID INSULATION - 07 54 00

GENERAL NOTES

1. FOR TYPICAL ROOF PENETRATIONS, SEE DETAIL A9.1.1
2. FOR TYPICAL DUCT SUPPORT, SEE MECHANICAL

SEAL

LICENSED ARCHITECT
CHRISTOPHER C. VIDOVICH
NO. C26985
REN. 6-30-25
STATE OF CALIFORNIA

DSA #: 02-122544

Project
SOLANO COMMUNITY COLLEGE
AUTO TECH EXHAUST REPLACEMENT

Drawing Title
ROOF PLAN

Drawn By: FH
Checked By: SP

NO.	DATE	ISSUE

Project No.: 23-265
©Date: 02/19/2024

DRAWING NO.
A5.0.1

IDENTIFICATION STAMP
DIV. OF THE STATE ARCHITECT
APP. 02-122544 INC:
REVIEWED FOR
SS ☐ FLS ☐ ACS ☐
DATE: 09/09/2024

JKAE
architecture + interiors + engineering

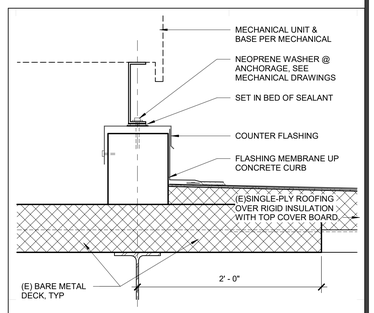

MECHANICAL CURB
1 1/2" = 1'-0"
4

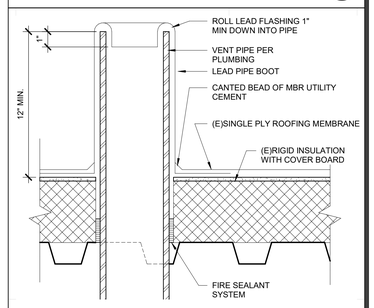

PIPE PENETRATION THRU SINGLE PLY
3" = 1'-0"
3

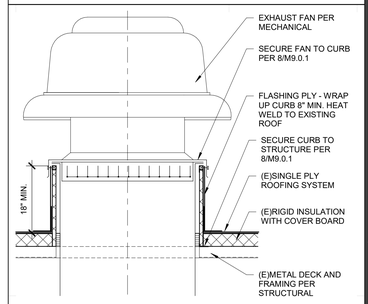

DETAIL - EXHAUST FAN @ CURB
1/2" = 1'-0"
2

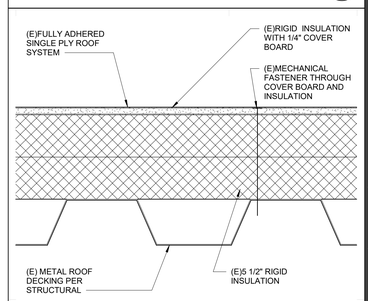

TYPICAL ROOF ASSEMBLY
3" = 1'-0"
1

SEAL

LICENSED ARCHITECT
CHRISTOPHER C. KIEWICZ
NO. C26985
REN. 6-30-25
STATE OF CALIFORNIA

DSA #: 02-122544

Project
SOLANO COMMUNITY COLLEGE
AUTO TECH EXHAUST REPLACEMENT

Drawing Title
ROOF DETAILS

Drawn By
Author
Checked By
Checker

NO.	DATE	ISSUE

Project No.
23-265
©Date
02/19/2024
DRAWING NO.
A9.1.1

Drawings and specifications prepared by JKAE and consultants are for use solely with respect to this project. JKAE and consultants are deemed the authors and owners of these documents and shall retain all common law, statutory and other reserved rights, including copyrights. These documents shall not be used by the owner for future additions or alterations to this project or for other projects without the prior written agreement of JKAE. Any unauthorized use of these documents shall be at the Owner's sole risk and without liability to JKAE and consultants.
Autodesk Docs://23-265 Autotech Exhaust Replacement/23-265 Autotech Exhaust Replacement.
8/30/2024 12:06:24 PM ARCH.rvt

GENERAL REQUIREMENTS

1. THE GENERAL CONTRACTOR AND INVOLVED PARTIES ARE RESPONSIBLE FOR READING AND COMPLYING WITH THE INFORMATION IN THESE STRUCTURAL DRAWINGS AND SPECIFICATIONS.
2. THE CONTRACTOR SHALL VERIFY ALL DIMENSIONS AND CONDITIONS PRIOR TO STARTING CONSTRUCTION. THE ARCHITECT & ENGINEER (A/E) SHALL BE NOTIFIED OF ANY DISCREPANCIES OR INCONSISTENCIES.
3. DO NOT SCALE THE DRAWINGS FOR WORKING DIMENSIONS. DRAWINGS ARE DIAGRAMMATIC AND MAY NOT SCALE ACCURATELY. STRUCTURAL DRAWINGS AND GRAPHICS ARE INTENDED TO BE VIEWED AND PRINTED IN COLOR; PRINTING OR VIEWING IN BLACK-AND-WHITE IS NOT RECOMMENDED.
4. NOTES AND DETAILS ON DRAWINGS SHALL TAKE PRECEDENCE OVER GENERAL NOTES AND TYPICAL DETAILS. TYPICAL DETAILS SHALL APPLY TO THE PROJECT DRAWINGS EXCEPT WHEN SPECIFIC DETAILS ARE SHOWN WHICH SHALL TAKE PRECEDENCE.
5. ALL WORK SHALL COMPLY WITH THE MINIMUM STANDARDS OF THE CURRENT ADOPTED BUILDING CODE, THE LATEST EDITION OF ASTM OR OTHER INDUSTRY STANDARDS REFERENCED, AND ALL APPLICABLE LOCAL, STATE AND FEDERAL REQUIREMENTS AND REGULATIONS. FOR ITEMS, METHODS, AND/OR MATERIALS NOT SHOWN, ALL WORK SHALL CONFORM TO THE MINIMUM STANDARDS OF THE REGULATING AGENCIES THAT HAVE AUTHORITY OVER SUCH PORTIONS OF WORK.
6. THE CONTRACTOR SHALL BE DIRECTLY RESPONSIBLE FOR COORDINATING THE FOLLOWING TYPES OF ITEMS WHICH ARE TYPICALLY SHOWN ON ARCHITECTURAL DRAWINGS: SIZES AND LOCATIONS OF WINDOW AND DOOR OPENINGS, CONCRETE CURBS, FLOOR DRAINS AND DEPRESSED SLAB AREAS, FLOOR AND INTERIOR OR EXTERIOR NON-STRUCTURAL WALLS PARTITIONS, ETC.
7. THE CONTRACTOR SHALL BE DIRECTLY RESPONSIBLE FOR COORDINATING THE FOLLOWING TYPES OF ITEMS WHICH ARE TYPICALLY SHOWN ON MECHANICAL, PLUMBING, AND ELECTRICAL DRAWINGS: SIZES AND LOCATIONS OF MECHANICAL EQUIPMENT, DUCTWORK RUNS, CONDUIT OR CABLE TRAY RUNS, PIPE RUNS, AND ALL ASSOCIATED SLEEVES, PENETRATIONS, OPENINGS, HANGERS, INSERTS, ETC.
8. THE CONTRACT STRUCTURAL DRAWINGS AND SPECIFICATIONS REPRESENT THE FINISHED STRUCTURE. THEY DO NOT INDICATE THE METHOD OF CONSTRUCTION. THE CONTRACTOR SHALL PROVIDE ALL MEASURES NECESSARY TO PROTECT THE STRUCTURE DURING CONSTRUCTION. SUCH MEASURES SHALL INCLUDE, BUT NOT BE LIMITED TO, BRACING, SHORING FOR LOADS DUE TO CONSTRUCTION EQUIPMENT, ETC. OBSERVATION VISITS TO THE SITE BY THE STRUCTURAL ENGINEER SHALL NOT INCLUDE INSPECTION OF THE ABOVE ITEMS.
9. CONSTRUCTION MATERIALS SHALL BE SPREAD OUT IF PLACED ON FRAMED FLOORS OR ROOFS. LOAD SHALL NOT EXCEED THE DESIGN LIVE LOAD PER SQUARE FOOT. PROVIDE ADEQUATE SHORING AND/OR BRACING WHERE STRUCTURE HAS NOT ATTAINED DESIGN STRENGTH.
10. NO CHANGES OR DEVIATIONS FROM THE PLANS AND SPECIFICATIONS WILL BE ALLOWED WITHOUT WRITTEN AUTHORIZATION FROM THE A/E. ANY DESIRED CHANGES OR DEVIATIONS SHALL BE PRESENTED TO THE A/E FOR REVIEW WITH NO GUARANTEE THAT THE SUBSTUTION WILL BE ALLOWED.
11. THE CONTRACTOR SHALL BE DIRECTLY RESPONSIBLE FOR COORDINATING THE STRUCTURE (I.E. LOWERING FOOTINGS, ETC.) TO WORK WITH GRADES WHICH ARE TYPICALLY SHOWN ON ARCHITECTURAL OR CIVIL DRAWINGS. THE STRUCTURAL ENGINEER TAKES NO RESPONSIBILITY FOR DAMAGE TO THE STRUCTURE, OR ADDITIONAL CONSTRUCTION COSTS CAUSED BY LACK OF SUCH COORDINATION OR MISREPRESENTATIONS OF THE RELATIVE POSITION OF THE STRUCTURE WITH RESPECT TO GRADES ON THE BUILDING SITE.
12. THE CONTRACTOR SHALL NOTIFY THE ARCHITECT AND STRUCTURAL ENGINEER WHERE A CONFLICT OR DISCREPANCY OCCURS BETWEEN THE STRUCTURAL DRAWINGS AND ANY OTHER PORTION OF THE CONTRACT DOCUMENTS OR EXISTING FIELD CONDITIONS. SUCH NOTIFICATION SHALL BE GIVEN IN DUE TIME SO AS NOT TO AFFECT THE CONSTRUCTION SCHEDULE. IN CASE OF A CONFLICT BETWEEN STRUCTURAL DRAWINGS AND SPECIFICATIONS THE MORE RESTRICTIVE CONDITION SHALL TAKE PRECEDENCE UNLESS WRITTEN APPROVAL HAS BEEN GIVEN FOR THE LEAST RESTRICTIVE.
13. WHERE NO SPECIFIC DETAIL IS SHOWN, THE CONSTRUCTION SHALL BE IDENTICAL OR SIMILAR TO THAT INDICATED FOR LIKE CASES OF CONSTRUCTION ON THIS PROJECT. SHOULD THERE BE ANY QUESTION, CONTACT THE ARCHITECT AND STRUCTURAL ENGINEER PRIOR TO PROCEEDING.
14. WHEN CONSTRUCTION ATTACHES TO OR IS WITHIN AN EXISTING BUILDING, A COMPLETE SET OF DRAWINGS OF THE EXISTING BUILDING SHALL BE KEPT ON THE JOB SITE. CONTRACTOR TO OBTAIN THESE DRAWINGS FROM THE OWNER (IF THEY ARE AVAILABLE).
15. THESE DRAWINGS ARE NOT COMPLETE UNTIL REVIEWED AND ACCEPTED BY THE ENFORCEMENT AGENCY AND SIGNED BY THE STRUCTURAL ENGINEER.

STRUCTURAL DESIGN CRITERIA

CODE:
2022 TITLE 24 CALIFORNIA CODE OF REGULATIONS (CCR)
STRUCTURAL RISK CATEGORY III (EDUCATION FACILITY)

DEAD LOADS:
ROOF DEAD LOAD: 20 PSF

LIVE LOADS:
ROOF LIVE LOAD, L_r: 20 PSF

WIND DESIGN DATA:
ULTIMATE WIND SPEED, V: 99 MPH
EXPOSURE CATEGORY: C
ENCLOSURE CLASS: ENCLOSED (GC_{pi} = 0.18)
RISK CATEGORY: III

EARTHQUAKE DESIGN DATA:
S_S: 1.520
S_1: 0.600
SITE CLASS: C
S_{DS}: 1.216
S_{D1}: 0.560
I_E: 1.25
SEISMIC DESIGN CATEGORY: D
ANALYSIS PROCEDURE: SEISMIC DEMANDS ON NONSTRUCTURAL COMPONENTS (ASCE 7-16 SEC. 13.3)
COMPONENT AMPLIFICATION FACTOR, a_p: 2.5 (AIR-SIDE HVAC)
COMPONENT RESISTANCE FACTOR, R_p: 6 (AIR-SIDE HVAC)
COMPONENT IMPORTANCE FACTOR, I_p: 1.0 (ASCE 7-16 SEC. 13.1.3)

STRUCTURAL STEEL

1. STRUCTURAL STEEL DETAILING, FABRICATION, ERECTION, AND MATERIALS SHALL CONFORM TO THE CURRENT VERSION OF THE AISC MANUAL FOR STEEL CONSTRUCTION, AISC 360 FOR STRUCTURAL STEEL BUILDINGS AND TO AISC 341 FOR SEISMIC PROVISIONS.
2. ALL HOT ROLLED STEEL SHAPES, PLATES, AND BARS SHALL CONFORM TO ASTM A6 AND THE FOLLWOING, U.N.O.:
   1. WIDE FLANGE (W) AND WT-SHAPES: ASTM A992
   2. RECTANGULAR HSS TUBING: ASTM A500, GR. C (F_y = 50 KSI)
   3. ROUND HSS TUBING: ASTM A500, GR. C (F_y = 46 KSI)
   4. STEEL PIPE SHAPES: ASTM A53, GR. B (F_y = 35 KSI)
   5. ALL OTHER SHAPES, PLATES, AND BARS: ASTM A36, U.N.O.
3. ALL STRUCTURAL BOLTS AND THREADED FASTENERS SHALL CONFORM TO RCSC AND THE FOLLOWING, U.N.O.:
   1. TYPICAL HIGH-STRENGTH BOLTS (HSB): ASTM F3125, GR. A325
   2. TWIST-OFF TENSION-CONTROLLED HSB: ASTM F3125, GR. F1852
   3. COMMON MACHINE BOLTS (MB): ASTM A307, GR. A
   4. ANCHOR BOLTS (AB): ASTM F1554, GR. 36
   5. HEAVY HEX NUTS: ASTM 563
   6. TYPICAL WASHERS: ASTM F844
   7. HARDENED WASHERS (TYP AT HSB): ASTM F436
4. HIGH-STRENGTH BOLTS (HSB) MAY BE TYPE N (THREADS INCLUDED) TYP. U.N.O. AND MAY BE INSTALLED SNUG-TIGHT IN ACCORDANCE WITH RCSC SPECIFICATION FOR STRUCTURAL JOINTS USING HIGH-STRENGTH BOLTS. AT THE CONTRACTOR'S OPTION, TWIST-OFF TENSION-CONTROL BOLTS MAY BE USED TO SIMPLIFY INSTALLATION.
5. BOLT HOLES SHALL BE AISC STANDARD HOLES UNLESS SPECIFIED OTHERWISE. USE STANDARD AISC GAGE AND PITCH FOR BOLTS EXCEPT AS NOTED OTHERWISE.
6. WELDING SHALL BE DONE BY THE ELECTRIC ARC PROCESS IN ACCORDANCE WITH AMERICAN WELDING SOCIETY STANDARDS, USING ONLY CERTIFIED WELDERS. ALL GROOVE WELDS SHALL HAVE COMPLETE PENETRATION UNLESS NOTED OTHERWISE. ALL ELECTRODES FOR WELDING SHALL COMPLY WITH AWS D1.1 AND D1.8 AS APPLICABLE, E70XX SERIES MINIMUM.
7. WELD LENGTHS SPECIFIED ON PLANS ARE THE NET EFFECTIVE LENGTHS REQUIRED.
8. MINIMUM FILLET WELDS: (T = THICKNESS OF THINNER PART JOINED)
   T < 1/2": 3/16"
   T < 3/4": 1/4"
   T > 3/4": 5/16"
9. HEADED AND THREADED STUDS SHALL BE NELSON STUD ANCHORS (NSA) OR APPROVED EQUAL, OF THE SIZES INDICATED ON THE DRAWINGS, WITH FLUXED ENDS AUTOMATICALLY END WELDED PER THE MANUFACTURER'S REQUIREMENTS.
10. ALL STRUCTURAL AND MISCELLANEOUS STEEL WORK SHALL BE SHOP PRIMED AND TOUCHED UP IN THE FIELD AFTER ERECTION EXCEPT STEEL TO BE EMBEDDED IN CONCRETE, SPRAY FIRE PROOFED, GALVANIZED, OR WHERE REQUIRED FOR SPECIAL CONNECTIONS LIKE FIELD WELDS OR AT CONTACT FACES OF CONNECTIONS USING HIGH STRENGTH BOLTS. COORDINATE PRIMER WITH FINISH REQUIREMENTS TO ENSURE PRIMER IS COMPATIBLE WITH TOPCOATS. PROVIDE 3" MINIMUM CONCRETE COVER FOR ALL STEEL EXPOSED TO EARTH.
11. ALL STRUCTURAL STEEL SHALL BE ERECTED PLUMB AND TRUE TO LINE. TEMPORARY BRACING SHALL BE INSTALLED AND SHALL BE LEFT IN PLACE UNTIL OTHER MEANS ARE PROVIDED TO ADEQUATELY BRACE THE STRUCTURE. THE CONTRACTOR IS RESPONSIBLE FOR REVIEWING ALL BASE PLATE AND SUPPORT CONDITIONS DURING ERECTION AND BRACING AS REQUIRED. SEE AISC AND OSHA REQUIREMENTS.

ABBREVIATIONS

2L	DOUBLE ANGLE	ID	INSIDE DIAMETER
AB	ANCHOR BOLT	IN	INCHES
ADDL	ADDITIONAL	INCL	INCLUDE OR INCLUDED
AGGR	AGGREGATE	INT	INTERIOR
ALT	ALTERNATE	JT	JOINT
ANC	ANCHOR	K	KIP (1,000 LBS)
APPROX	APPROXIMATE	LAM	LAMINATED
ARCH	ARCHITECTURAL	LBS	POUNDS
ASSY	ASSEMBLY	LLG	LONG LEG HORIZONTAL
AVG	AVERAGE	LLV	LONG LEG VERTICAL
BLDG	BUILDING	MFR	MANUFACTURER
BLK'G	BLOCKING	MATL	MATERIAL
BM	BEAM	MAX.	MAXIUM
BN	BOUNDARY NAILING	MB	MACHINE BOLT
B.O.	BOTTOM OF	MECH	MECHANICAL
BOD	BOTTOM OF DECK	MEZZ	MEZZANINE
BRG	BEARING	MF	MOMEMENT FRAME
BTM	BOTTOM	MIN.	MINIMUM
C/C	CENTER TO CENTER	MISC	MIXCELLANEOUS
CEN	CENTER	MK	MARK
CG	CENTER OF GRAVITY	MTL	METAL
CJ	CONSTRUCTION JOINT	MULT	MULTIPLE
CJP	COMPLETE JOINT PENETRATION	NF	NEAR FACE
CLG	CEILING	NIC	NOT IN CONTACT
CLR	CLEAR	NOM	NOMINAL
CMU	CONCRETE MASONRY UNITS	(N)	NEW
COL	COLUMN	NS	NEAR SIDE
CONC	CONCRETE	NTS	NOT TO SCALE
CONN	CONNECTION	O/	OVER
CONSTR	CONSTRUCTION	O.C.	ON CENTER
CONT	CONTINUOUS	OD	OUTSIDE DIAMETER
CONTR	CONTRACTOR	OPNG	OPENING
CTJ	CONTROL JOINT	OPP	OPPOSITE
DBA	DEFORMED BAR ANCHOR	ORG	ORIGINAL
DBL	DOUBLE	PCF	POUNDS PER CUBIC FOOT
DF	DOUGLAS FIR	PSF	POUNDS PER SQUARE FOOT
DIA	DIAMETER	PSI	POUNDS PER SQUARE INCH
DIAG	DIAGONAL	PT	POST-TENSIONED
DIMS	DIMENSIONS	PTN	PARTITION
DO	DITTO	RAD	RADIUS
DTL	DETAIL	RC	REINFORCED CONCRETE
DWG	DRAWING	REF	REFERENCE
EA.	EACH	REV	REVISION
EF	EACH FACE	REQ'D	REQUIRED
EJ	EXPANSION JOINT	SCHED.	SCHEDULE
EL	ELEVATION	SECT.	SECTION
ELECT	ELECTRICAL	S.F.	SQUARE FEET
E.N.	EDGE NAIL	SHT	SHEET
ENGR	ENGINEER	SIM	SIMILAR
EQ	EQUAL	S.O.G.	SLAB ON GRADE
EQUIP	EQUIPMENT	SPECS	SPECIFICATIONS
EW	EACH WAY	SQ.	SQUARE
EXCAV	EXCAVATE	STD	STANDARD
(E)	EXISTING	STFNR	STIFFNER
EXP	EXPANSION	STGRD	STAGGERED
EXT	EXTERIOR	STL	STEEL
FAB	FABRICATION	STRUCT.	STRUCTURAL
FD	FLOOR DRAIN	SYM	SYMMETRICAL
FDN	FOUNDATION	T&B	TOP AND BOTTOM
F.F.	FINISHED FLOOR	T&G	TONGUE AND GROOVE
FIG	FIGURE	THK	THICK
FIN	FINISH	THRD	THREADED
FLR	FLOOR	THRU	THROUGH
FN	FIELD NAILING	TO	TOP OF
FO	FACE OF	TOB	TOP OF BEAM
FOC	FACE OF CONCRETE	TOC	TOP OF CONCRETE
FOS	FACE OF STUD	TOF	TOP OF FOOTING (U.N.O.)
FOW	FACE OF WALL	TOL	TOLERANCE
FRMG	FRAMING	TOM	TOP OF MASONRY
FS	FAR SIDE	TOS	TOP OF STEEL
FT	FEET	TOW	TOP OF WALL
FTG	FOOTING	TS	STRUCTURAL TUBING
GA	GAGE OR GAUGE	TYP.	TYPICAL
GALV	GALVANIZE	U.N.O.	UNLESS NOTED OTHERWISE
GB	GRADE BEAM	V	VERTICAL REINFOREMENT
GLB	GLULAM BEAM	VERT.	VERTICAL
GR	GRADE	VOL	VOLUME
GRND	GROUND	W/	WITH
H	HORIZONTAL REINF.	W/O	WITHOUT
HGT	HEIGHT	WD	WOOD
HORIZ	HORIZONTAL	WP	WORK POINT
HSA	HEADED STUD ANCHOR	WT	WEIGHT
		WWF	WELDED WIRE FABRIC

SHEET INDEX

S0.0.1	STRUCTURAL GENERAL NOTES & TYPICAL DETAILS
S2.0.1	STRUCTURAL ROOF FRAMING PLAN

Grand total: 2

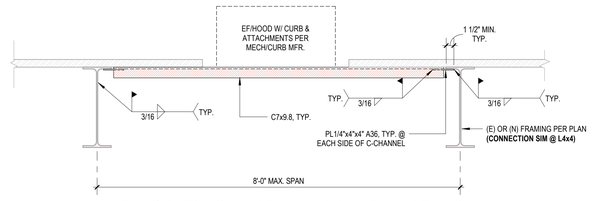

Typ. Retrofitted Support Framing at Minor Exhaust Fans & Hoods 3
1" = 1'-0"

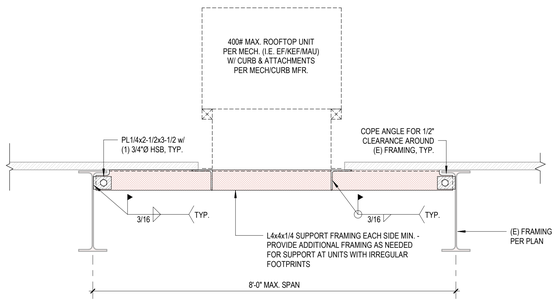

Typ. Retrofitted Support Framing at Minor Rooftop Units 2
1" = 1'-0"

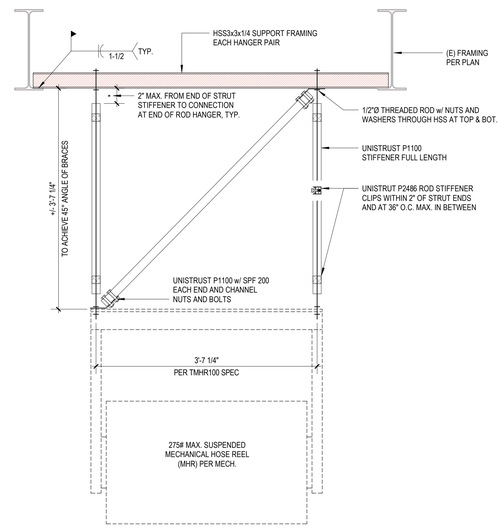

Typ. Retrofitted Support Framing at Suspended Units 1
1" = 1'-0"

IDENTIFICATION STAMP
DIV. OF THE STATE ARCHITECT
APP. 02-122544 INC:
REVIEWED FOR
SS ☒ FLS ☐ ACS ☒
DATE: 09/09/2024

JKAE
architecture + interiors + engineering

SEAL
LICENSED PROFESSIONAL ENGINEER — CHRISTOPHER B. SCHAEFFER — 37235 — STRUCTURAL — STATE OF CALIFORNIA
09.04.2024

DSA SUBMITTAL

DSA #: 02-122544

Project: SOLANO COMMUNITY COLLEGE — AUTO TECH FACILITY

Drawing Title: STRUCTURAL GENERAL NOTES & TYPICAL DETAILS

NO.	DATE	ISSUE

Drawn By: CBS
Checked By: CBS
Project No.: 23-265
@Date: 09.04.2024

DRAWING NO.: S0.0.1

Drawings and specifications prepared by JKAE and consultants are for use solely with respect to this project. JKAE and consultants are deemed the authors and owners of these documents and shall retain all common law, statutory and other reserved rights, including copyrights. These documents shall not be used by the owner for future additions or alterations to this project or for other projects without the prior written agreement of JKAE. Any unauthorized use of these documents shall be at the Owner's sole risk and without liability to JKAE and consultants.

9/3/2024 9:11:01 AM
S:\PROJECTS\2023\23-265 Autech Exhaust Replacement\23-265 Autech Exhaust Replacement.rvt

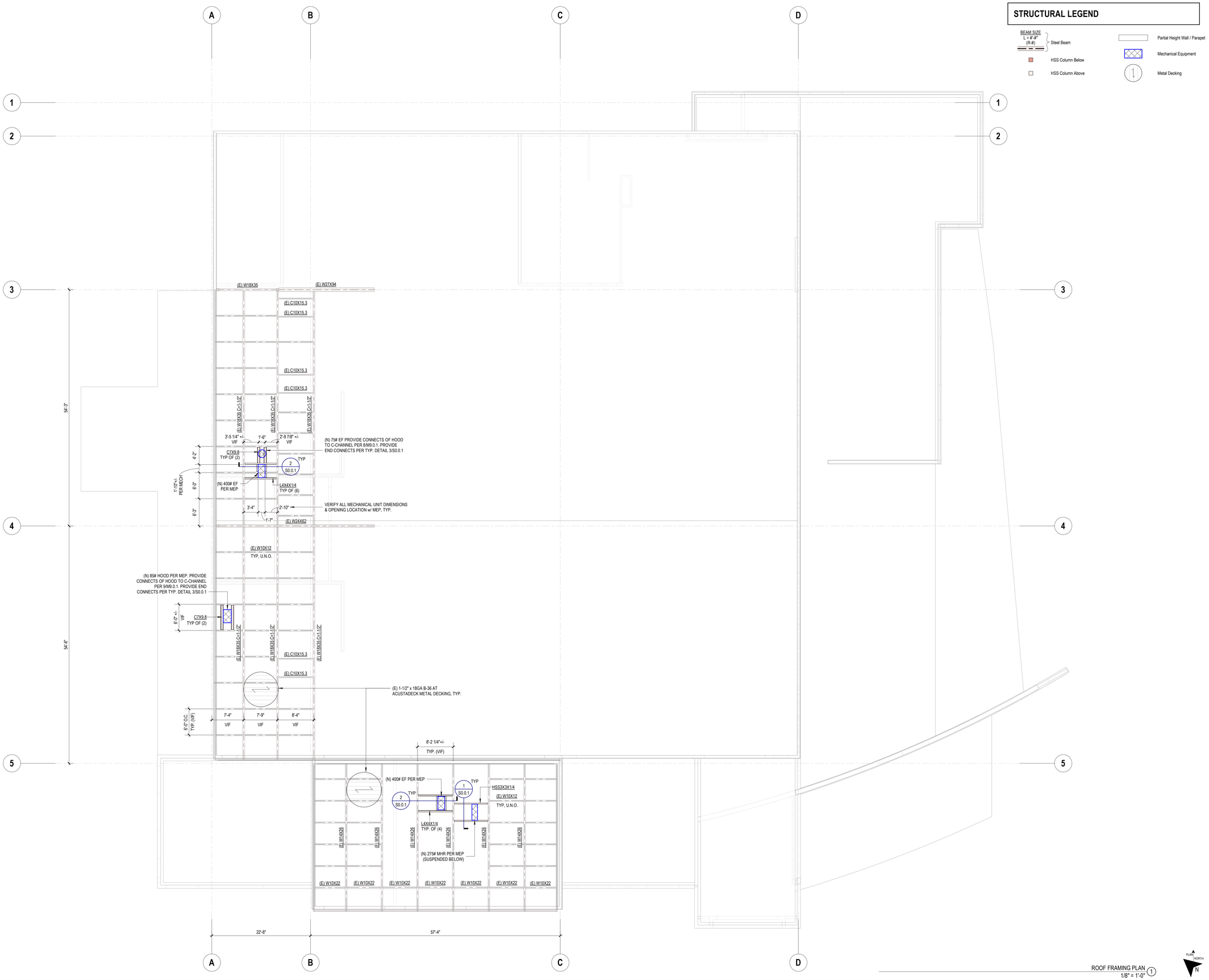

STRUCTURAL LEGEND

BEAM SIZE L = #'-#" (R-#) — Steel Beam

HSS Column Below

HSS Column Above

Partial Height Wall / Parapet

Mechanical Equipment

Metal Decking

ROOF FRAMING PLAN 1
1/8" = 1'-0"

PLAN NORTH N

IDENTIFICATION STAMP
DIV. OF THE STATE ARCHITECT
APP. 02-122544 INC:
REVIEWED FOR
SS ☐ FLS ☐ ACS ☐
DATE: 09/09/2024

JKAE
architecture + interiors + engineering

SEAL

LICENSED PROFESSIONAL ENGINEER COLTON SCHAEFER S-7235 STRUCTURAL STATE OF CALIFORNIA
09.04.2024

DSA SUBMITTAL

DSA #: 02-122544

Project
SOLANO COMMUNITY COLLEGE
AUTO TECH FACILITY

Drawing Title
STRUCTURAL ROOF FRAMING PLAN

NO.	DATE	ISSUE

Drawn By CBS
Checked By CBS
Project No. 23-265
©Date 09.04.2024
DRAWING NO.
S2.0.1

Drawings and specifications prepared by JKAE and consultants are for use solely with respect to this project. JKAE and consultants are deemed the authors and owners of these documents and shall retain all common law, statutory and other reserved rights, including copyrights. These documents shall not be used by the owner for future additions or alterations to this project or for other projects without the prior written agreement of JKAE. Any unauthorized use of these documents shall be at the Owner's sole risk and without liability to JKAE and consultants
Autotech Docs:23-265 Autotech Exhaust Replacement/23-265 Autotech Exhaust Replacement-
STRUCT.rvt
9/3/2024 9:11:02 AM

EQUIPMENT ANCHORAGE NOTES

ALL MECHANICAL, PLUMBING, AND ELECTRICAL COMPONENTS SHALL BE ANCHORED AND INSTALLED PER THE DETAILS ON THE DSA APPROVED CONSTRUCTION DOCUMENTS. THE FOLLOWING COMPONENTS SHALL BE ANCHORED OR BRACED TO MEET THE FORCE AND DISPLACEMENT REQUIREMENTS PRESCRIBED IN THE 2022 CBC SECTIONS 1617A.1.18 THROUGH 1617A.1.26 AND ASCE 7-16 CHAPTERS 13, 26 AND 30.

1. ALL PERMANENT EQUIPMENT AND COMPONENTS.
2. TEMPORARY, MOVABLE OR MOBILE EQUIPMENT THAT IS PERMANENTLY ATTACHED (E.G. HARD WIRED) TO THE BUILDING UTILITY SERVICES SUCH AS ELECTRICITY, GAS OR WATER. "PERMANENTLY ATTACHED" SHALL INCLUDE ALL ELECTRICAL CONNECTIONS EXCEPT PLUGS FOR 110/220 VOLT RECEPTACLES HAVING A FLEXIBLE CABLE.
3. TEMPORARY, MOVABLE OR MOBILE EQUIPMENT WHICH IS HEAVIER THAN 400 POUNDS OR HAS A CENTER OF MASS LOCATED 4 FEET OR MORE ABOVE THE ADJACENT FLOOR OR ROOF LEVEL THAT DIRECTLY SUPPORT THE COMPONENT IS REQUIRED TO BE RESTRAINED IN A MANNER APPROVED BY DSA.

THE FOLLOWING MECHANICAL AND ELECTRICAL COMPONENTS SHALL BE POSITIVELY ATTACHED TO THE STRUCTURE BUT NEED NOT DEMONSTRATE DESIGN COMPLIANCE WITH THE REFERENCES NOTED ABOVE. THESE COMPONENTS SHALL HAVE FLEXIBLE CONNECTIONS PROVIDED BETWEEN THE COMPONENT AND ASSOCIATED DUCTWORK, PIPING, AND CONDUIT. FLEXIBLE CONNECTIONS MUST ALLOW MOVEMENT IN BOTH TRANSVERSE AND LONGITUDINAL DIRECTIONS:

A. COMPONENTS WEIGHING LESS THAN 400 POUNDS AND HAVE A CENTER OF MASS LOCATED 4 FEET OR LESS ABOVE THE ADJACENT FLOOR OR ROOF LEVEL THAT DIRECTLY SUPPORT THE COMPONENT.
B. COMPONENTS WEIGHING LESS THAN 20 POUNDS, OR IN THE CASE OF DISTRIBUTED SYSTEMS, LESS THAN 5 POUNDS PER FOOT, WHICH ARE SUSPENDED FROM A ROOF OR FLOOR OR HUNG FROM A WALL.

THE ANCHORAGE OF ALL MECHANICAL, ELECTRICAL AND PLUMBING COMPONENTS SHALL BE SUBJECT TO THE APPROVAL OF THE DESIGN PROFESSIONAL IN GENERAL RESPONSIBLE CHARGE OR STRUCTURAL ENGINEER DELEGATED RESPONSIBILITY AND ACCEPTANCE BY DSA. THE PROJECT INSPECTOR WILL VERIFY THAT ALL COMPONENTS AND EQUIPMENT HAVE BEEN ANCHORED IN ACCORDANCE WITH ABOVE REQUIREMENTS.

PIPING AND DUCTWORK DISTRIBUTION SYSTEM BRACING NOTES

PIPING, DUCTWORK, AND ELECTRICAL DISTRIBUTION SYSTEMS SHALL BE BRACED TO COMPLY WITH THE FORCES AND DISPLACEMENTS PRESCRIBED IN ASCE 7-16 SECTION 13.3 AS DEFINED IN ASCE 7-16 SECTIONS 13.6.5, 13.6.6, 13.6.7, 13.6.8; AND 2022 CBC, SECTIONS 1617A.1.24 THROUGH 1617A.1.26.

THE METHOD OF SHOWING BRACING AND ATTACHMENTS TO THE STRUCTURE FOR THE IDENTIFIED DISTRIBUTION SYSTEM ARE AS NOTED BELOW. WHEN BRACING AND ATTACHMENTS ARE BASED ON A PRE-APPROVED INSTALLATION GUIDE (E.G., OSHPD OPM FOR 2013 CBC OR LATER), COPIES OF THE BRACING SYSTEM INSTALLATION GUIDE OR MANUAL SHALL BE AVAILABLE ON THE JOBSITE PRIOR TO THE START OF AND DURING THE HANGING AND BRACING OF THE DISTRIBUTION SYSTEMS. THE STRUCTURAL ENGINEER OF RECORD SHALL VERIFY THE ADEQUACY OF THE STRUCTURE TO SUPPORT THE HANGER AND BRACE LOADS.

MECHANICAL PIPING (MP), MECHANICAL DUCTS (MD), PLUMBING PIPING (PP), ELECTRICAL DISTRIBUTION SYSTEMS (E):

MP	MD	PP	E	
☒	☒	☐	☐	OPTION 1: DETAILED ON THE APPROVED DRAWINGS WITH PROJECT SPECIFIC NOTES AND DETAILS.
MP	MD	PP	E	
☐	☐	☐	☐	OPTION 2: SHALL COMPLY WITH THE APPLICABLE HCAI PRE-APPROVAL (OPM#) #0043-13.

MECHANICAL LEGEND

SYMBOL	ITEM	ABBR.
	SUPPLY AIR	SA
	RETURN AIR	RA
	EXHAUST AIR	EA
	OUTSIDE AIR	OSA
	TRANSFER AIR	TA
1 / M-2	DETAIL DESIGNATION DETAIL NUMBER SHEET NO. WHERE SHOWN	
AC / 1	EQUIPMENT DESIGNATION UNIT ABBREVIATION NUMBER	
A / 10x10 / 120 / (CRD / FD)	GRILLE DESIGNATION NECK SIZE CFM FIRE DAMPER WHERE REQ'D	
	ACOUSTIC LINED DUCT	L
	TURNING VANES	TV
	DUCT FLEXIBLE CONNECTION	
	DUCT RISER	
	DUCT DROP	
	RECTANGULAR TO ROUND FITTING	
	VOLUME CONTROL DAMPER	VD
FD	FIRE DAMPER W/ ACCESS	FD
FSD	FIRE SMOKE DAMPER W/ ACCESS	FSD
CRD	CEILING RADIATION DAMPER	CRD
	OPPOSED BLADE DAMPER	OBD
	BACKDRAFT DAMPER	BDD
M	MOTORIZED DAMPER	
T	THERMOSTAT @ +48" AFF (MAX.) (TOP OF BOX)	T-STAT
S	SENSOR @ +48" AFF	
SP	STATIC PRESSURE SENSOR @ +48" AFF	
CO	CARBON MONOXIDE SENSOR @ +48" AFF	
CO2	CARBON DIOXIDE SENSOR @ +48" AFF	
TC	TIMECLOCK @ +48" AFF	
TCP	TEMPERATURE CONTROL PANEL	TCP
SD	DUCT SMOKE DETECTOR	SD
	PIPE RISER / DROP	(R) / (D)
	FROM ABOVE	(FA)
	FROM BELOW	(FB)
	TO ABOVE	(TA)
	TO BELOW	(TB)
	ABOVE FINISHED FLOOR	AFF
	UNLESS OTHERWISE NOTED	UON
	TYPICAL	(TYP)
	BOTTOM OF DUCT	BOD
	UNDERCUT DOOR 3/4"	UCD
	NEW	(N)
	EXISTING	(E)
	POINT OF DISCONNECTION	POD/POC
	REFRIGERANT LIQUID	RL
	REFRIGERANT SUCTION	RS
	DEMOLISHED/DEMO	

MECHANICAL SPECIFICATIONS

1. THIS CONTRACTOR SHALL COMPLY WITH ALL CODES AND REGULATIONS IN EFFECT AT THE JOB SITE, INCLUDING, BUT NOT LIMITED TO:
   A. 2022 CALIFORNIA BUILDING CODE
   B. 2022 CALIFORNIA MECHANICAL CODE
   C. 2022 CALIFORNIA PLUMBING CODE
   D. 2022 CALIFORNIA ELECTRICAL CODE
   E. 2022 CALIFORNIA GREEN BUILDING STANDARDS
   F. 2022 CALIFORNIA BUILDING ENERGY EFFICIENCY STANDARDS - TITLE 24
   G. NATIONAL FIRE PROTECTION ASSOCIATION
   H. CALIFORNIA STATE FIRE MARSHAL
2. ALL MATERIALS AND EQUIPMENT INSTALLED UNDER THIS CONTRACT SHALL BE GUARANTEED FREE FROM ALL MECHANICAL, ELECTRICAL AND WORKMANSHIP DEFECTS FOR A PERIOD OF ONE YEAR FROM DATE OF FINAL ACCEPTANCE. THE CONTRACTOR SHALL BE RESPONSIBLE FOR REPAIRING OR REPLACING ALL DAMAGED ITEMS INSTALLED UNDER THIS CONTRACT WITHOUT ADDITIONAL COST TO OWNER.
3. THE MECHANICAL CONTRACTOR SHALL PROVIDE THE OWNER COPIES OF OPERATION, MAINTENANCE AND PREVENTATIVE MAINTENANCE MANUALS FOR EACH MODEL AND TYPE OF MECHANICAL EQUIPMENT.
4. CHECK AND VERIFY EXISTING CONDITIONS AT THE JOB SITE BEFORE BEGINNING WORK. ADJUST THE LOCATION AND CONFIGURATION OF THE WORK NECESSARY TO SUIT ACTUAL CONDITIONS AND OTHER TRADES. ANY CHANGES REQUIRED MUST FIRST BE APPROVED BY THE ARCHITECT OR ENGINEER.
5. THE LOCATIONS OF EQUIPMENT, PIPING, DUCTWORK AND SYSTEMS SHOWN ON THE DRAWINGS ARE DIAGRAMMATIC AND SHALL BE FOLLOWED AS CLOSELY AS POSSIBLE. CHANGES REQUIRED TO SUIT EXISTING CONDITIONS AND DUE TO COORDINATION WITH OTHER TRADES SHALL BE MADE AT NO EXTRA COST TO THE OWNER.
6. ALL EQUIPMENT IS TO BE INSTALLED AS RECOMMENDED BY THE MANUFACTURER. USING ALL ACCESSORY EQUIPMENT AVAILABLE FROM THE MANUFACTURER FOR SUPPORTS, CONTROLS, ETC., TO MAKE A COMPLETE SYSTEM. ALL EQUIPMENT OR ACCESSORIES NEEDED AND NOT SHOWN OR SPECIFIED SHALL BE FURNISHED AND INSTALLED BY THIS CONTRACTOR. ADJUST THE EQUIPMENT FOR PROPER OPERATION, CHECK ALL CONTROLS AND VERIFY THAT ALL SAFETY DEVICES ARE FUNCTIONING PROPERLY.
7. PROVIDE ACCESS DOORS WHERE ACCESS THROUGH FLOORS, WALLS OR CEILINGS IS REQUIRED TO ACCESS MECHANICAL CONTROL SYSTEM COMPONENTS, FIRE/SMOKE DAMPERS, SMOKE DETECTORS, ETC., OR OTHER SYSTEMS REQUIRING ACCESS FOR MAINTENANCE, TESTING OR OBSERVATION. COORDINATE THE EXACT TYPE AND LOCATION OF ACCESS DOORS TO PROVIDE PROPER ACCESS TO THE ITEM CONCEALED.
8. CHECK ALL PIPE AND DUCTWORK FOR LEAKS AND EXCESSIVE AIR LOSS AND NOISE. CORRECT ANY DEFICIENCIES AS SOON AS DISCOVERED. OPERATE THE SYSTEMS AS A TEST AND DEMONSTRATE TO THE OWNER AND ARCHITECT OR ENGINEER THAT THE SYSTEM IS FUNCTIONING PROPERLY.
9. VEHICLE EXHAUST DUCTWORK:
   A. FABRICATE IN ACCORDANCE WITH DUCTWORK MANUFACTURER'S INSTRUCTIONS, SMACNA (DCS), SMACNA (KVS), AND NFPA 96.
   B. ROUND, SINGLE-WALL, VEHICLE EXHAUST DUCT:
      1. CONSTRUCT OF 20-GAUGE, 0.035-INCH, TYPE 304 STAINLESS STEEL WITH CONTINUOUS EXTERNAL WELDED JOINTS IN RECTANGULAR SECTIONS.
      2. UL 1978 LISTED FACTORY BUILT DUCT MAY BE USED IN LIEU OF FABRICATED DUCT. DUCTWORK TO BE MINIMUM -6" W.G.
   C. RECTANGULAR, SINGLE-WALL, VEHICLE EXHAUST DUCT:
      1. CONSTRUCT OF 16-GAUGE, 0.059-INCH, TYPE 304 STAINLESS STEEL WITH CONTINUOUS EXTERNAL WELDED JOINTS IN RECTANGULAR SECTIONS.
      2. UL 1978 LISTED FACTORY BUILT DUCT MAY BE USED IN LIEU OF FABRICATED DUCT. DUCTWORK TO BE MINIMUM -6" W.G..
10. GENERAL USE DUCTWORK:
    A. GALVANIZED STEEL DUCTS SHALL BE ASTM A 653/A 653M GALVANIZED STEEL SHEET, FORMING STEEL (FS) DESIGNATION, WITH G90/Z275 ZINC COATING.
    B. FABRICATE, SUPPORT AND SEAL DUCTWORK IN ACCORDANCE WITH SMACNA HVAC DUCT CONSTRUCTION STANDARDS - METAL AND FLEXIBLE. AND AS INDICATED. PROVIDE DUCT MATERIAL, GAGES, REINFORCING, AND SEALING FOR 4" STATIC PRESSURE UPSTREAM OF TERMINAL UNITS (VAV, CAV BOXES) AND 2" STATIC PRESSURE DOWNSTREAM OF TERMINAL UNITS (VAV, CAV BOXES).
11. WRAP ALL INDOOR VEHICLE EXHAUST DUCTWORK WITH 2-LAYERS OF FIRE RESISTANT DUCT WRAP FOR GREASE DUCT APPLICATIONS, 3M FIRE BARRIER DUCT WRAP 615+, OR EQUAL.
12. CONSTRUCT DUCTWORK 'S, BENDS, AND ELBOWS WITH RADIUS OF NOT LESS THAN 1-1/2 TIMES WIDTH OF DUCT ON CENTERLINE. WHERE NOT POSSIBLE RECTANGULAR ELBOWS MUST BE USED, PROVIDE AIR FOIL TURNING VANES. WHERE ACOUSTICAL LINING IS INDICATED, PROVIDE TURNING VANES OF PERFORATED METAL WITH GLASS FIBER INSULATION.
13. COMBINATION FIRE AND SMOKE DAMPERS SHALL MEET THE REQUIREMENTS OF NFPA 90A, UL 555, UL 555S, AND AS INDICATED. PROVIDE FACTORY SLEEVE AND COLLAR FOR EACH DAMPER.
14. ALL INSULATION AND LINER PRODUCTS SURFACE BURNING CHARACTERISTICS: FLAME SPREAD/SMOKE DEVELOPED INDEX OF 25/50, MAXIMUM, WHEN TESTED IN ACCORDANCE WITH ASTM E 84, NFPA 255, OR UL 723.
15. SEAL ALL STANDING SEAMS AND TRANSVERSE JOINTS IN ALL SHEETMETAL DUCTWORK WITH HARDCAST IRON GRIP PREMIUM FLEXIBLE WATER BASED DUCT SEALANT.
16. PERFORM TOTAL SYSTEMS BALANCE IN ACCORDANCE WITH AABC, ASHRAE STD 111, OR NEBB PROCEDURAL STANDARDS FOR TESTING, BALANCING AND ADJUSTING OF ENVIRONMENTAL SYSTEMS.
17. COVERING OF DUCT OPENINGS AND PROTECTION OF MECHANICAL EQUIPMENT DURING CONSTRUCTION. AT THE TIME OF ROUGH INSTALLATION AND DURING STORAGE ON THE CONSTRUCTION SITE UNTIL FINAL STARTUP OF THE HEATING, COOLING AND VENTILATION EQUIPMENT, ALL DUCT AND OTHER RELATED AIR DISTRIBUTION COMPONENT OPENINGS SHALL BE COVERED WITH TAPE, PLASTIC, SHEETMETAL OR OTHER METHODS ACCEPTABLE TO THE ENFORCING AGENCY TO REDUCE THE AMOUNT OF DUST, WATER AND DEBRIS WHICH MAY ENTER THE SYSTEM.

MECHANICAL SHEET INDEX

SHEET NUMBER	SHEET NAME
M0.0.1	MECHANICAL LEGEND AND NOTES
M0.0.2	MECHANICAL SCHEDULES
M2.0.1	MECHANICAL DEMO FLOOR PLAN
M2.1.1	MECHANICAL FLOOR PLAN
M5.0.0	MECHANICAL DEMO ROOF PLAN
M5.0.1	MECHANICAL ROOF PLAN
M9.0.1	MECHANICAL DETAILS

IDENTIFICATION STAMP
DIV. OF THE STATE ARCHITECT
APP. 02-122544 INC:
REVIEWED FOR
SS ☒ FLS ☒ ACS ☒
DATE: 09/09/2024

JKAE
architecture + interiors + engineering

LP CONSULTING ENGINEERS
MEP & FS / Sustainability / CxA
1209 Pleasant Grove Blvd.
Roseville, CA 95678
p 916-771-0778
www.lpengineers.com
Job #: 23-2066

SEAL

REGISTERED PROFESSIONAL ENGINEER
RYAN ENAIS
M 41413
REN. 03-31-25
MECHANICAL
STATE OF CALIFORNIA

DSA SUBMITTAL

DSA #: 02-122544

Project
SOLANO COMMUNITY COLLEGE
AUTO TECH FACILITY

Drawing Title
MECHANICAL LEGEND AND NOTES

Drawn By: LR/KS
Checked By: RE

NO.	DATE	ISSUE

Project No.: 23-265
Date: 06-05-2024

DRAWING NO.
M0.0.1

8/15/2024 3:41:39 PM Autodesk Docs://23-265 Autotech Exhaust Replacement/23-2066 Solano Autotech_MEP_r23.rvt

EXHAUST FAN SCHEDULE

TYPE	MARK	FAN TYPE	MOUNTING	ELECTRICAL					FAN								OPERATING WEIGHT	MANUFACTURER	MODEL	NOTES
				VOLTAGE	PHASE	FLA	MCA	MOP	HP	DRIVE	FAN RPM	CFM	E.S.P. (IN. WC.)	dBA	CONTROL					
REF	1	CENTRIFUGAL	ROOF	115	1	1.38	2	15	0.10	DIRECT	1334	500	0.25	50	WALL SWITCH		75 lb	GREENHECK	G-090-VG	PROVIDE BACKDRAFT DAMPER. FACTORY ROOF CURB AND DAMPER TRAY. PROVIDE FACTORY PREWIRED DISCONNECT SWITCH. PROVIDE FACTORY VARI-GREEN FAN SPEED CONTROLLER.
VEF	1	CENTRIFUGAL	ROOF	460	3	3.91	0	0	2.42	BELT	2331	2,500	4	79	CONTROL PANEL		400 lb	VENTAIRE	UVS150	PROVIDE VENTAIRE DS3R-1/3-32A-4X ENCLOSED IEC NON-FUSED DISCONNECT SWITCH. PROVIDE EFC2-460-3-3-460-1 EFC2 SERIES ENCLOSED STARTERS. PROVIDE TWO 8" STAINLESS METAL TAIL PIPE ADAPTER (TS80). PROVIDE TWO FREE STANDING BASES (FSB36). PROVIDE EXTREMELY HIGH TEMPERATURE FLEXIBLE HOSE RATED TO 2010 DEG F (HT2010). PROVIDE TWO MALE QUICK DISCONNECT FITTINGS (MG80) AND TWO FEMALE QUICK DISCONNECT FITTINGS (FG80).
VEF	2	CENTRIFUGAL	ROOF	460	3	6.49	0	0	3.61	BELT	2691	2,500	6	80	CONTROL PANEL		400 lb	VENTAIRE	UVS150	PROVIDE VENTAIRE DS3R-1/3-32A-4X ENCLOSED IEC NON-FUSED DISCONNECT SWITCH. PROVIDE EFC2-460-3-3-460-1 EFC2 SERIES ENCLOSED STARTERS.

GRAVITY VENTILATOR HOOD SCHEDULE

TYPE	MARK	HOOD TYPE	MOUNTING	CFM	THROAT AREA (SQ. FT.)	THROAT SIZE (IN.)	PRESSURE DROP (IN. WC.)	THROAT VELOCITY (FPM)	OPERATING WEIGHT	MANUFACTURER	MODEL	NOTES
IH	1	INTAKE	ROOF	500	1.67	12 x 20	0.024	300	85 lb	GREENHECK	FGI	PROVIDE FACTORY ROOF CURB. PROVIDE ADJUSTABLE COUNTERBALANCED BACKDRAFT DAMPER. FACTORY PRESET TO 0.05" W.C.. COORDINATE BACKDRAFT DAMPER INSTALLATION AND OPERATION WITH HOODS INTENDED FOR AIR INTAKE AND AIR RELIEF/EXHAUST. PROVIDE INSECT SCREEN.

AIR DISTRIBUTION SCHEDULE

SYMBOL	TYPE	DESCRIPTION
H	SIDEWALL SUPPLY	STEEL LOUVERED SUPPLY GRILLE WITH DOUBLE DEFLECTION AND INDIVIDUALLY ADJUSTABLE BLADES AT 3/4" SPACING. FINISH: COLOR BY ARCHITECT. FRAME: FLAT SURFACE. TITUS 300RL. REFER TO THE MECHANICAL PLANS FOR NECK SIZE, CFM, AIR DIFFUSION PATTERN, AND FIRE DAMPER (IF REQUIRED)
J	SIDEWALL EXHAUST	ALUMINUM EGGCRATE EXHAUST GRILLE WITH 1/2"x1/2"x1/2" GRID. FINISH: COLOR BY ARCHITECT. FRAME: FLAT SURFACE. TITUS MODEL 50R. REFER TO THE MECHANICAL PLANS FOR NECK SIZE, CFM, AIR DIFFUSION PATTERN, AND FIRE DAMPER (IF REQUIRED).

MISCELLANEOUS EQUIPMENT SCHEDULE

TYPE	MARK	EQUIPMENT	DESCRIPTION
MHR	1	MOTORIZED HOSE REEL	VENTAIRE MODEL TMHR100 MOTORIZED HOSE REEL 10" DIAMETER. 120/1/60, 5.1A, 600W AND 10 RPM ELECTRICAL MOTOR. PROVIDE HOSE REEL CONTROL STATION (WCB4). PROVIDE 10" WYE ADAPTER (YS10080). PROVIDE TWO 8" STAINLESS METAL TAIL PIPE ADAPTER (TS80). PROVIDE TWO FREE STANDING BASES (FSB36). PROVIDE EXTREMELY HIGH TEMPERATURE FLEXIBLE HOSE RATED TO 2010 DEG F (HT2010). MAXIMUM WEIGHT 275 LBS.

IDENTIFICATION STAMP
DIV. OF THE STATE ARCHITECT
APP. 02-122544 INC:
REVIEWED FOR
SS ☒ FLS ☒ ACS ☒
DATE: 09/09/2024

JKAE
architecture + interiors + engineering

MEP & FS / Sustainability / CxA

1209 Pleasant Grove Blvd.
Roseville, CA 95678
p 916-771-0778

www.lpengineers.com
Job #: 23-2066

SEAL

REGISTERED PROFESSIONAL ENGINEER
RYAN ENAIS
M 41413
REN. 03-31-25
MECHANICAL
STATE OF CALIFORNIA

DSA SUBMITTAL

DSA #: 02-122544

Project
SOLANO COMMUNITY COLLEGE
AUTO TECH FACILITY

Drawing Title
MECHANICAL SCHEDULES

Drawn By
LR/KS

Checked By
RE

NO.	DATE	ISSUE

Project No.
23-265

Date
06-05-2024

DRAWING NO.
M0.0.2

8/15/2024 3:41:40 PM Autodesk Docs://23-265 Autotech Exhaust Replacement/23-2066 Solano Autotech_MEP_23.rvt

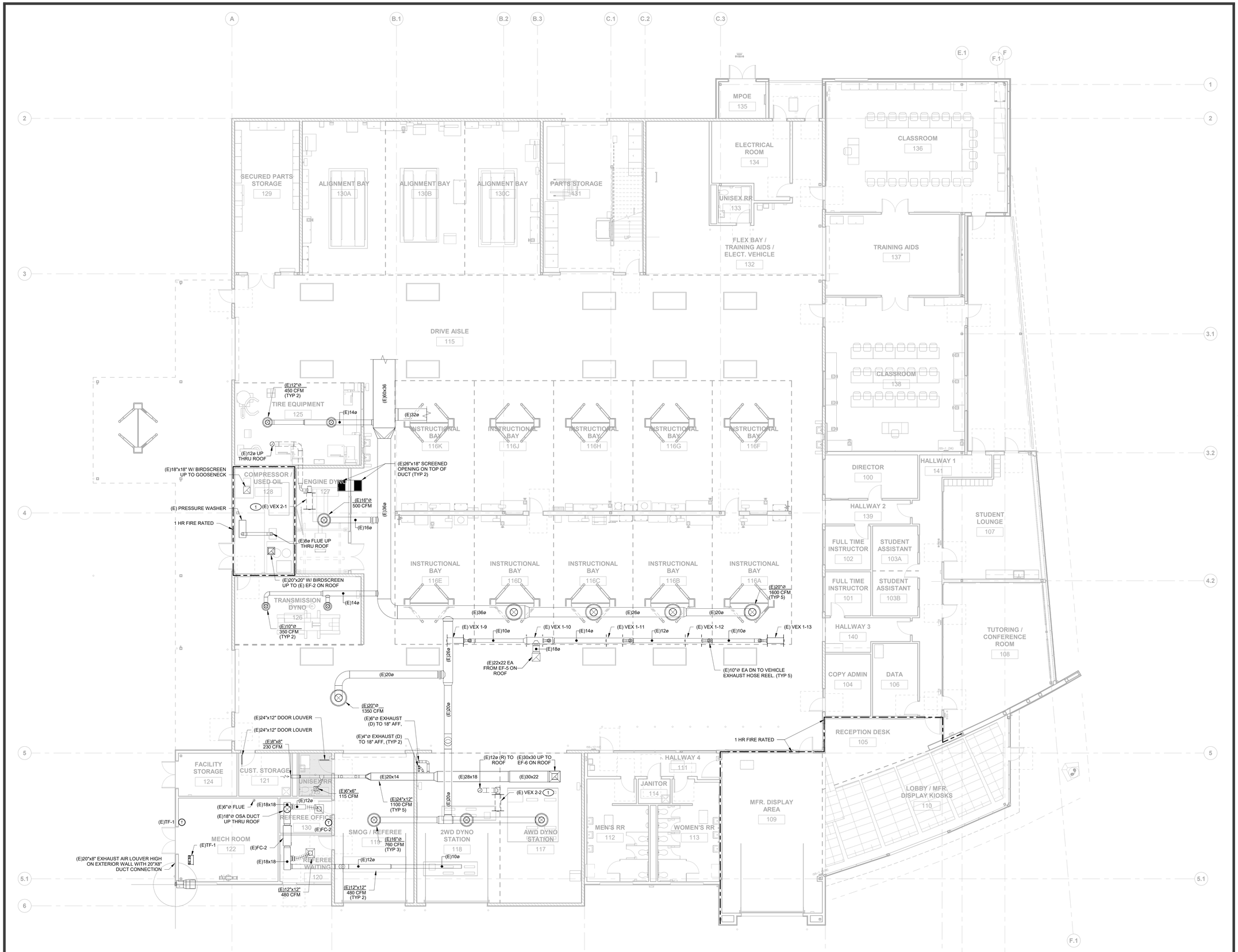

1 **MECHANICAL DEMO FLOOR PLAN**
SCALE: 1/8" = 1'-0"

PLAN NORTH

IDENTIFICATION STAMP
DIV. OF THE STATE ARCHITECT
APP. 02-122544 INC:
REVIEWED FOR
SS ☐ FLS ☐ ACS ☐
DATE: 09/09/2024

JKAE
architecture + interiors + engineering

KEY NOTES

1 REMOVE EXISTING VEHICLE EXHAUST MOTORIZED HOSE REEL AND RELATED DUCTWORK SHOWN DASHED. PATCH WALLS AND ROOF WHERE NEEDED.

GENERAL NOTES

A. FIELD VERIFY EXISTING CONDITIONS PRIOR TO PERFORMING WORK. NOTIFY ARCHITECT AND ENGINEER OF ANY CONFLICTS OR DISCREPANCIES.

LP CONSULTING ENGINEERS
MEP & FS / Sustainability / CxA
1209 Pleasant Grove Blvd.
Roseville, CA 95678
p 916-771-0778
www.lpengineers.com
Job #: 23-2066

SEAL

REGISTERED PROFESSIONAL ENGINEER
BRYAN ENTIS
M 41413
REN. 03-31-25
MECHANICAL
STATE OF CALIFORNIA

DSA SUBMITTAL

DSA #: 02-122544

Project
SOLANO COMMUNITY COLLEGE
AUTO TECH FACILITY

Drawing Title
MECHANICAL DEMO FLOOR PLAN

Drawn By: LR/KS
Checked By: RE

NO.	DATE	ISSUE

Project No.: 23-265
©Date: 06-05-2024
DRAWING NO.: **M2.0.1**

Autodesk Docs://23-265 Ashtech Exhaust Replacement/23-2066 Solano Ashtech_MEP_r23.rvt
8/19/2024 3:25:27 PM

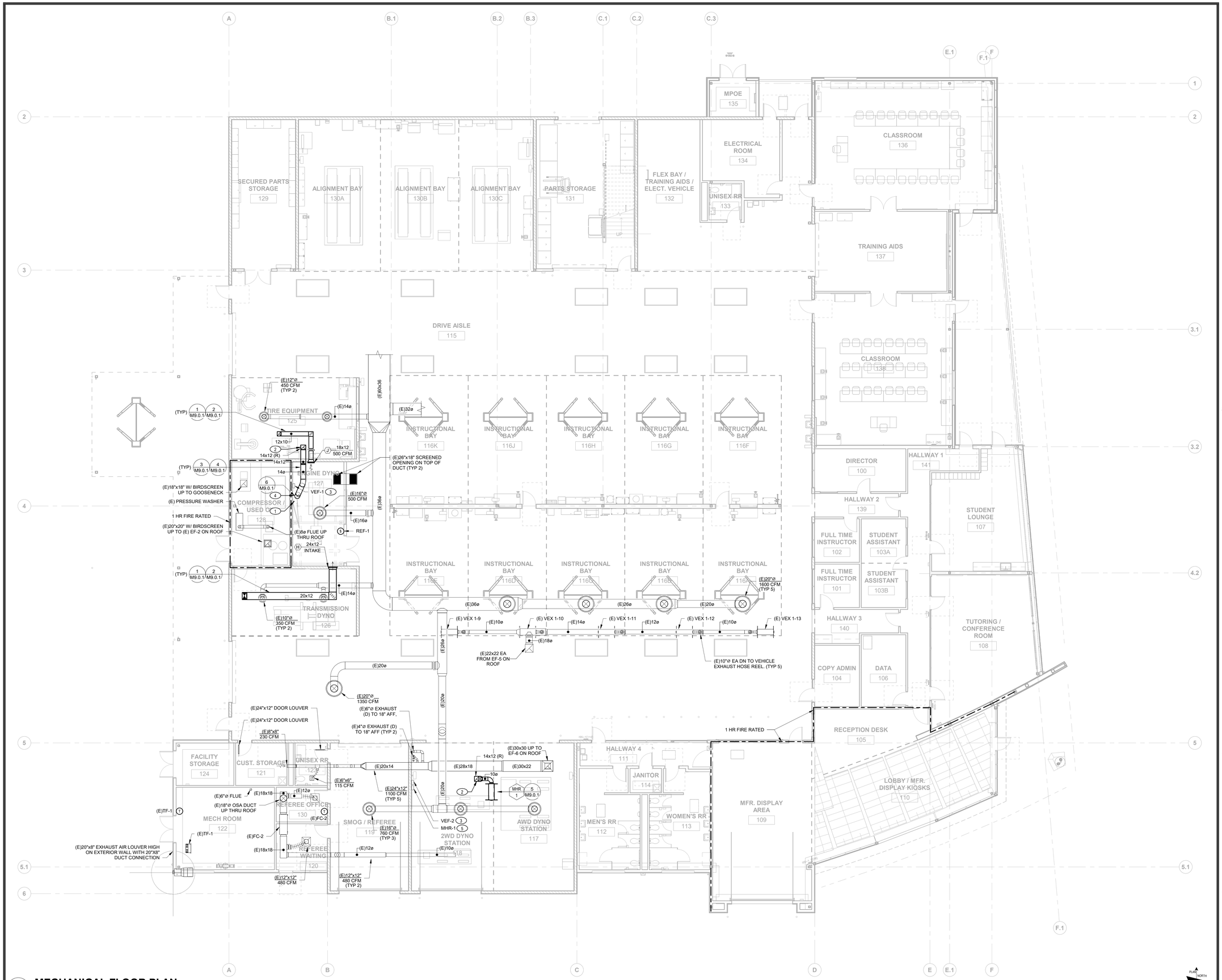

1 MECHANICAL FLOOR PLAN

SCALE: 1/8" = 1'-0"

IDENTIFICATION STAMP
DIV. OF THE STATE ARCHITECT
APP. 02-122544 INC:
REVIEWED FOR
SS ☐ FLS ☐ ACS ☐
DATE: 09/09/2024

JKAE
architecture + interiors + engineering

KEY NOTES

1. 2" GALVANIZED STEEL VENT PIPE EXPOSED ON INTERIOR WALL. ROUTE UP THROUGH ROOF WITH JR SMITH 1748 VENT CAP. PROVIDE FEMALE THREADED CONNECTION AT 30" AFF FOR CONNECTION TO FUTURE PERMANENT FUEL CELL BY OWNER. COORDINATE THREADED CONNECTION REQUIREMENTS WITH OWNER.
2. RIGID VEHICLE EXHAUST DUCTWORK INDOORS TO BE WELDED STAINLESS STEEL WITH TWO LAYERS OF 3M FIRE BARRIER DUCT WRAP.
3. VEHICLE EXHAUST FAN CONTROL PANEL BY FAN MANUFACTURER. INSTALL PER MANUFACTURER'S RECOMMENDATIONS.
4. 14" VEHICLE EXHAUST DUCT RACKED ON WALL WITH WYE TO (2) 8" CONNECTIONS TO VENTAIR FLEXIBLE HOSE QUICK DISCONNECTS AT BETWEEN 24" AND 36" AFF. COORDINATE EXACT HEIGHT WITH OWNER. CONNECT VENTAIRE EXTREMELY HIGH TEMPERATURE FLEXIBLE HOSE WITH STANDS AND TAILPIPE ADAPTERS TO QUICK DISCONNECTS. INSTALL PER MANUFACTURER'S RECOMMENDATIONS.
5. HOSE REEL CONTROL STATION. INSTALL PER MANUFACTURER'S RECOMMENDATIONS.

GENERAL NOTES

A. FIELD VERIFY EXISTING CONDITIONS PRIOR TO PERFORMING WORK. NOTIFY ARCHITECT AND ENGINEER OF ANY CONFLICTS OR DISCREPANCIES.

LP CONSULTING ENGINEERS
MEP & FS / Sustainability / CxA
1209 Pleasant Grove Blvd.
Roseville, CA 95678
p 916-771-0778
www.lpengineers.com
Job #: 23-2066

SEAL

REGISTERED PROFESSIONAL ENGINEER
RYAN ENNIS
M 41413
REN. 03-31-25
MECHANICAL
STATE OF CALIFORNIA

DSA SUBMITTAL

DSA #: 02-122544

Project
SOLANO COMMUNITY COLLEGE
AUTO TECH FACILITY

Drawing Title
MECHANICAL FLOOR PLAN

Drawn By: LR/KS
Checked By: RE

NO.	DATE	ISSUE

Project No.: 23-265
Date: 06-05-2024
DRAWING NO.: M2.1.1

Autodesk Docs://23-265 Autotech Exhaust Replacement/23-2066 Solano Autotech_MEP_23.rvt
8/19/2024 3:18:16 PM

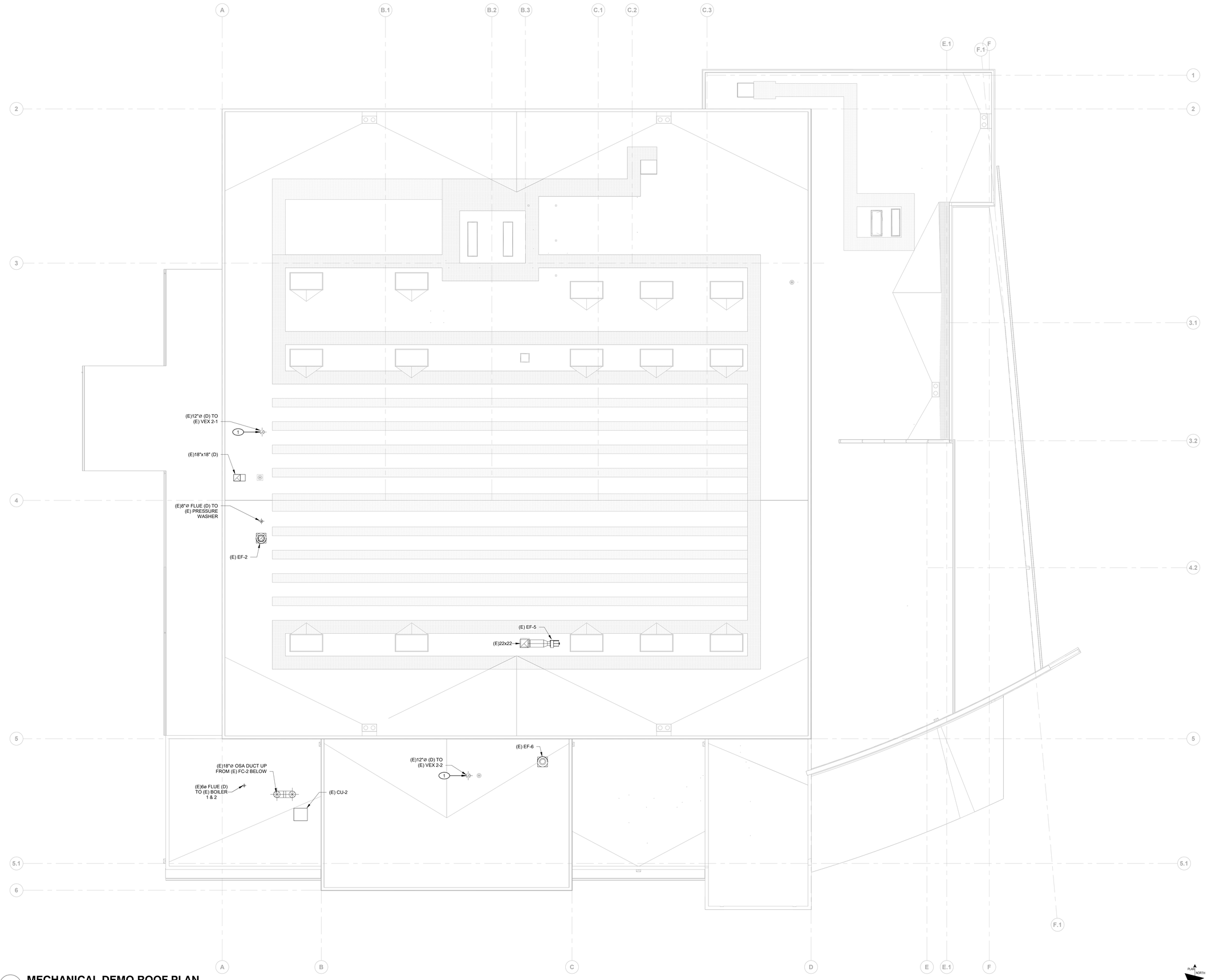

1 **MECHANICAL DEMO ROOF PLAN**
SCALE: 1/8" = 1'-0"

IDENTIFICATION STAMP
DIV. OF THE STATE ARCHITECT
APP: 02-122544 INC:
REVIEWED FOR
SS ☒ FLS ☐ ACS ☒
DATE: 09/09/2024

JKAE
architecture + interiors + engineering

KEY NOTES

1 REMOVE EXISTING DUCTWORK SHOWN DASHED AND PATCH ROOF.

GENERAL NOTES

A. FIELD VERIFY EXISTING CONDITIONS PRIOR TO PERFORMING WORK. NOTIFY ARCHITECT AND ENGINEER OF ANY CONFLICTS OR DISCREPANCIES.

LP CONSULTING ENGINEERS
MEP & FS / Sustainability / CxA
1209 Pleasant Grove Blvd.
Roseville, CA 95678
p 916-771-0778
www.lpengineers.com
Job #: 23-2066

SEAL

REGISTERED PROFESSIONAL ENGINEER
BRYAN ENNIS
M 41413
REN. 03-31-25
MECHANICAL
STATE OF CALIFORNIA

DSA SUBMITTAL

DSA #: 02-122544

Project
SOLANO COMMUNITY COLLEGE
AUTO TECH FACILITY

Drawing Title
MECHANICAL DEMO ROOF PLAN

Drawn By: LR/KS
Checked By: RE

NO.	DATE	ISSUE

Project No.: 23-265
©Date: 06-05-2024
DRAWING NO.: **M5.0.0**

Autodesk Docs://23-265 Autotech Exhaust Replacement/23-2065 Solano Autotech_MEP_r23.rvt
8/15/2024 3:41:58 PM

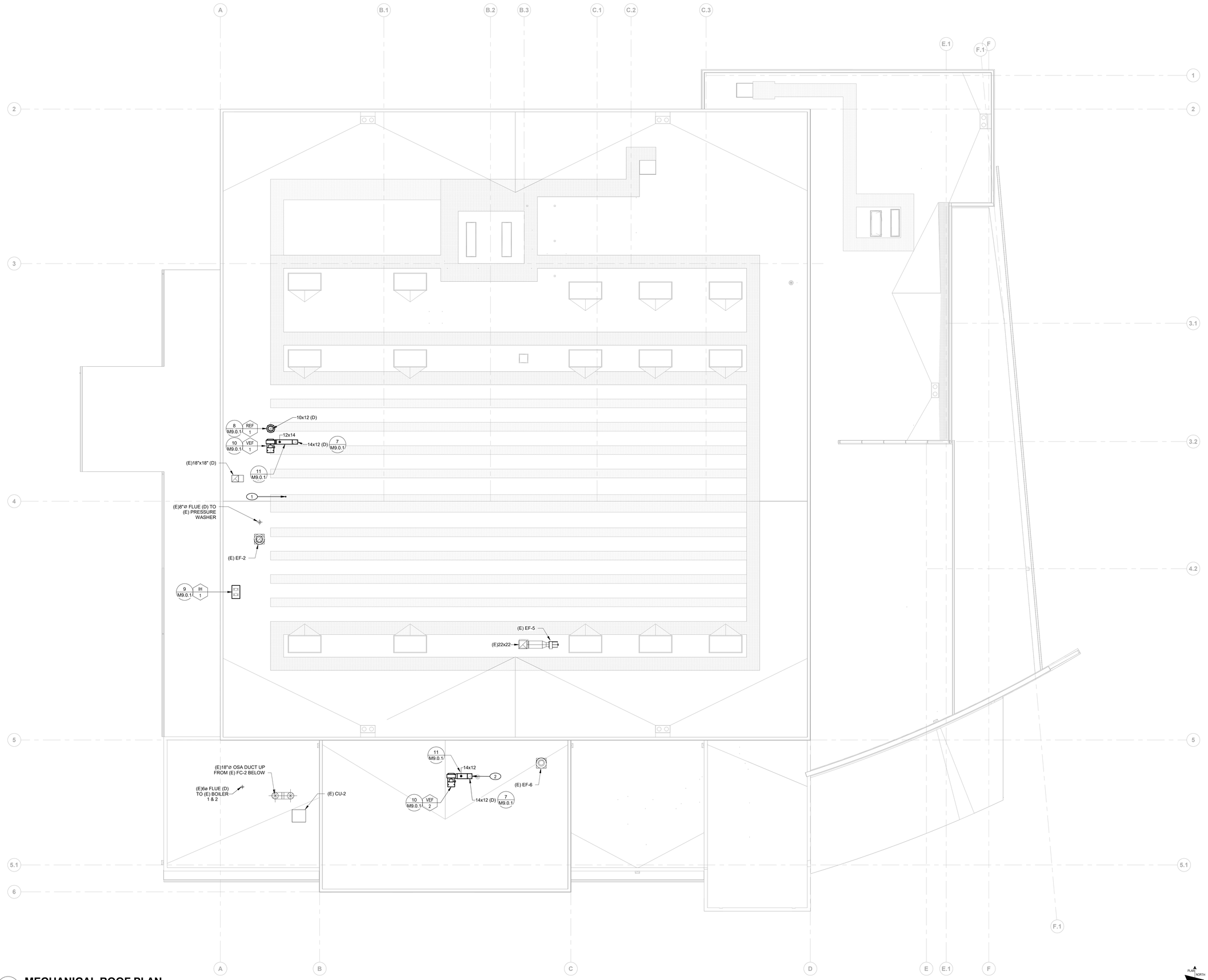

1 **MECHANICAL ROOF PLAN**
SCALE: 1/8" = 1'-0"

IDENTIFICATION STAMP
DIV. OF THE STATE ARCHITECT
APP: 02-122544 INC:
REVIEWED FOR
SS ☐ FLS ☐ ACS ☐
DATE: 09/09/2024

JKAE
architecture + interiors + engineering

KEY NOTES

1 2" GALVANIZED STEEL VENT PIPE EXPOSED ON INTERIOR WALL. ROUTE UP THROUGH ROOF WITH JR SMITH 1748 VENT CAP. PROVIDE FEMALE THREADED CONNECTION AT 30" AFF FOR CONNECTION TO FUTURE PERMANENT FUEL CELL BY OWNER. COORDINATE THREADED CONNECTION REQUIREMENTS WITH OWNER.

2 WELDED STAINLESS STEEL DUCTWORK. CONNECT TO VEHICLE EXHAUST FAN WITH UV RESISTANT FLEXIBLE DUCT CONNECTOR, DURODYNE OR EQUAL.

GENERAL NOTES

A. FIELD VERIFY EXISTING CONDITIONS PRIOR TO PERFORMING WORK. NOTIFY ARCHITECT AND ENGINEER OF ANY CONFLICTS OR DISCREPANCIES.

LP CONSULTING ENGINEERS
MEP & FS / Sustainability / CxA
1209 Pleasant Grove Blvd.
Roseville, CA 95678
p 916-771-0778
www.lpengineers.com
Job #: 23-2066

SEAL

REGISTERED PROFESSIONAL ENGINEER
BRYAN ENNIS
M 41413
REN. 03-31-25
MECHANICAL
STATE OF CALIFORNIA

DSA SUBMITTAL

DSA #: 02-122544

Project: SOLANO COMMUNITY COLLEGE
AUTO TECH FACILITY

Drawing Title
MECHANICAL ROOF PLAN

Drawn By: LR/KS
Checked By: RE
Project No.: 23-265
©Date: 06-05-2024
DRAWING NO.
M5.0.1

NO.	DATE	ISSUE

Autodesk Docs://23-265 Autotech Exhaust Replacement/23-2066 Solano Autotech_MEP_r23.rvt
8/15/2024 3:42:02 PM

1. INTAKE HOOD, SEE MECHANICAL SCHEDULES.
2. WOOD NAILER PROVIDED WITH UNIT CURB.
3. #12 TEK SCREWS WITH MIN. 3/4" EMBED. INTO CENTERLINE OF WOOD NAILER, MIN. (2) PER SIDE, SILICONE SEAL.
4. ROOFING UP AND UNDER FAN FLASHING.
5. UNIT PRESLOPED CURB, SEE SCHEDULES.
6. CANT STRIP.
7. ROOF INSULATION FORMED TO MEET CURB WHERE APPLICABLE, SEE ARCHITECTURAL DRAWINGS.
8. BACKDRAFT DAMPER PROVIDED WITH UNIT, SEE SCHEDULES.
9. DAMPER TRAY PROVIDED WITH UNIT, SEE SCHEDULES.
10. DUCTWORK, FULL SIZE OF CURB OPENING, SEE PLAN FOR ROUTING.
11. C7X9.8 STEEL CHANNEL, PLACE UNDER METAL DECK UNDER PERIMETER OF CURB. SEE STRUCTURAL FOR LENGTH OF CHANNEL AND CONNECTIONS.
12. 1/2"ø BOLT, WASHER AND NUT, MAX 24" O.C., MAX 8" FROM ENDS, MIN. (2) EACH SIDE.

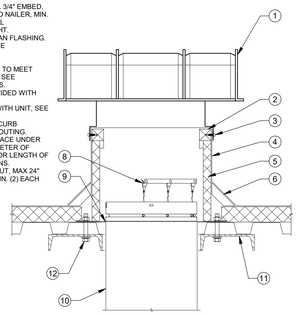

RELIEF/INTAKE HOOD MOUNTING | NTS | 9

1. HSS 3X3X1/4, WELDED TO (E) WIDE FLANGE. (2) PER HOSE REEL, SEE STRUCTRUAL DETAIL 1/S0.0.1 FOR ATTACHMENT.
2. HSS WELDED TO STRUCTURE, SEE 1/S0.0.1.
3. UNISTRUT AND ROD STIFFENER (TYP)
4. 3/8" ROD WITH WASHER AND NUT THROUGH HSS 3X3X1/4
5. TOLCO SWIVEL FITTING OR EQUAL
6. CHANNEL NUT AND CAP SCREW (TYP)

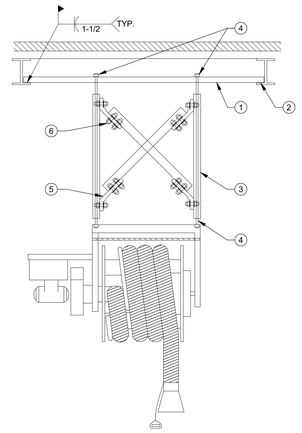

VEHICLE EXHAUST REEL DETAIL | NTS | 5

1. FLOOR/ROOF, SEE STRUCTURAL DRAWINGS.
2. FLOOR/ROOF FRAMING, SEE STRUCTURAL DRAWINGS.
3. 1" x 20 GA. GALV. SHEET METAL STRAP.
4. 3/8"ø THREADED ROD, B-LINE ATR OR EQUAL.
5. 3"x3"x1/4" GALVANIZED STEEL ANGLE.
6. 1-5/8"x1-5/8"x12 GA UNISTRUT CHANNEL, B-LINE B22 OR EQUAL.
7. 3/32"ø PRE-STRETCHED GALVANIZED AIRCRAFT CABLE, 7x19 STRAND CORE.
8. UNIVERSAL SWAY BRACE UPPER ATTACHMENT, B-LINE TOLCO FIG. 980 OR EQUAL.
9. 2"x3"x1/4" x 1-5/8" WIDE GALVANIZED STEEL ANGLE, B-LINE MODEL B154 OR EQUAL.
10. CABLE THIMBLE AND CABLE CLIPS.
11. (2) #12 TEK SCREWS PER ICC ESR-1976.
12. THREADED ROD BEAM CLAMP WITH RETAINING HOOK/STRAP, B-LINE B750 OR EQUAL.
13. UNISTRUT BEAM CLAMP, B-LINE B441 OR EQUAL, TORQUE TO 19 FT-LBS.
14. 3/8"ø BOLT, WASHER AND CHANNEL NUT.
15. (2) #10 TEK SCREWS PER ICC ESR-1976, MIN. 3/4" O.C., MIN. 3/8" FROM EDGES OF METAL DECK FLUTES.
16. 1-5/8"x1-5/8"x12 GA UNISTRUT CHANNEL, B-LINE B22 OR EQUAL, UNISTRUT TO SPAN MIN. (2) METAL DECK FLUTES.
17. (4) #10 TEK SCREWS PER ICC ESR-1976, MIN. 3/4" O.C., MIN. 3/8" FROM EDGES OF METAL DECK FLUTES.
18. NUT AND CHANNEL NUT WITH UNISTRUT SQUARE WASHER, B-LINE B201ZN OR EQUAL.
19. 1-5/8"X1-5/8"X12 GA DOUBLE UNISTRUT CHANNEL, B-LINE B22A OR EQUAL, CHANNEL LENGTH NOT TO EXCEED 10 FEET.
20. 1/2"ø BOLT WITH NUT AND UNISTRUT SQUARE WASHER, B-LINE B201ZN OR EQUAL.
21. NUT AND 1.25" SQUARE WASHER TOP AND BOTTOM, MIN 1/8" THICK. USE BEVELED WASHER AT SLOPED BEAMS, MIN 1/8" THICKNESS.
22. SAMMY XP 20 HANGER TO DECK (IAPMO ER 0423). MAX ONE HANGER PER DECK SPAN. PER DECK WIDTH. MAX ALLOWABLE LOAD 150 LBS.

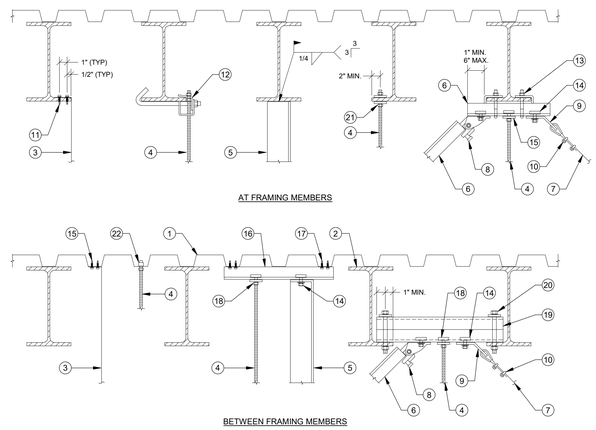

HANGER UPPER ATTACHMENTS | NTS | 1

1. UTILITY SET EXHAUST FAN, SEE SCHEDULE
2. WEATHERGUARD ENCLOSURE PROVIDED WITH FAN.
3. RECTANGULAR TO ROUND DUCT TRANSITION
4. MESH OUTLET SAFETY SCREEN PROVIDED BY FAN MFGR.
5. VIBRATION SPRING ISOLATOR PROVIDED WITH FAN, TYP. SILICONE SEAL ALL PENETRATIONS INTO CURB.
6. (4) 3/8"ø LAG SCREW INTO WOOD NAILER (ONE EACH CORNER). SILICONE SEAL PENETRATION WATERTIGHT.
7. CENTER SCREW ON WIDTH OF NAILER.
8. SHEET METAL CAP.
9. CANT STRIP, TYP.
10. 12" HIGH PREFAB. 18 GA. GALV. STEEL SUPPORT CURB WITH 1-1/2" PRESSURE TREADED WOOD NAILER AND SHEET METAL COUNTERFLASHING, PATE MODEL ES-2 OR EQUAL.
11. 5/8"ø ALL THREAD ROD W/ NUT AND WASHER EACH END (2 PER SIDE).
12. 1/2"ø BOLT WITH WASHER & NUT THRU L4X4X1/4, SEE STRUCTUAL DETAIL 2/S0.0.1 FOR ATTACHEMENT.
13. STRUCTURAL SUPPORT SEE STRUCTURAL DRAWINGS.

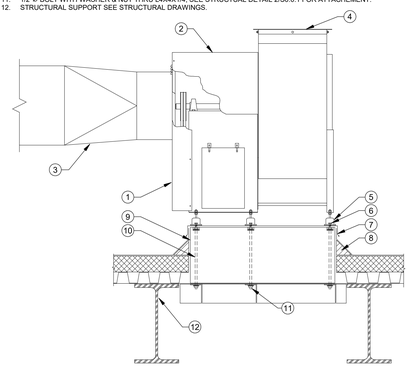

UTILITY EXHAUST FAN MOUNTING | NTS | 10

1. METAL STUD WALL.
2. "B-LINE" B11 CHANNEL. SECURE CHANNEL TO STUD WALL W/ (3) 5/8"ø LAG SCREWS. W/ MIN 3-1/2" EMBEDMENT PER CHANNEL.
3. DUCT ATTACHED TO WALL.
4. 1-1/2" WIDE 20 GA. SHT. MTL. STRAP AROUND DUCT. DBC OVER STRAP AT ENDS AND SECURE TO CHANNEL W/ (2) 1/4"ø HEX BOLTS AND CHANNEL NUTS. SECURE STRAP TO DUCT W/ #10 SMS ES.

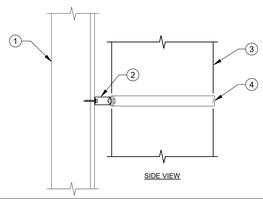

DUCT RISER ON WALL | NTS | 6

1. ROUND DUCT, SEE PLAN FOR SIZE AND ROUTING.
2. RECTANGULAR DUCT, SEE PLAN FOR SIZE AND ROUTING.
3. 1" x 20 GA. GALV. SHEET METAL STRAP.
4. 3/8"ø THREADED ROD, B-LINE ATR OR EQUAL.
5. 1-5/8"x1-5/8"x12 GA UNISTRUT CHANNEL, B-LINE B22 OR EQUAL.
6. 1" x 20 GA GALV. SHEET METAL STRAP WITH 3"x2" HIGH FLANGE.
7. NUT AND WASHER, TOP AND BOTTOM.
8. NUT, TOP AND BOTTOM WITH UNISTRUT SQUARE WASHER, B-LINE MODEL B201ZN OR EQUAL.
9. (2) #10 TEK SCREWS.

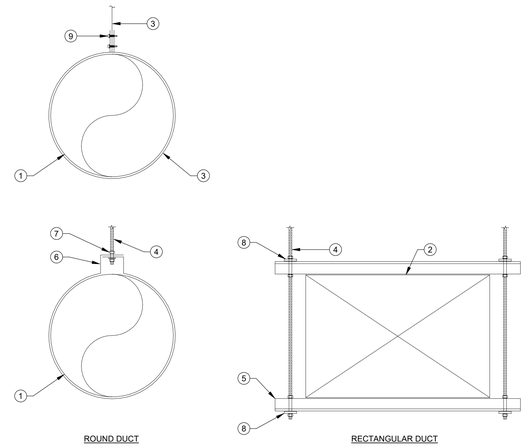

NOTES:
A. HANGER SPACING TO BE AT MAXIMUM 8FT O.C.

DUCT HANGERS | NTS | 2

1. TYPE 1 GREASE DUCT THRU ROOF, SEE PLAN FOR SIZE AND ROUTING.
2. SEALANT ALL AROUND.
3. #10 MIN. X 1" SM SCREW WITH NEOPRENE WASHER AT 6" O.C., SILICON SEAL PENETRATION WATERTIGHT
4. FLANGE WELDED TYPE 1 EXHAUST DUCTWORK.
5. PREFABRICATED PITCHED ROOF CURB, "THYCURB" MODEL TC-3 WITH WOOD NAILER.
6. 20 GA GALV SM COUNTER FLASHING.
7. ROOFING UP AND UNDER FLASHING.
8. RIGID INSULATION ALL AROUND
9. CANT STRIP
10. SECURE TO METAL DECK TOP FLUTE WITH #12 TEK SCREWS AT 12" O.C. (MIN 2 PER SIDE)
11. (2) LAYERS OF GREASE DUCT FIRE WRAP.

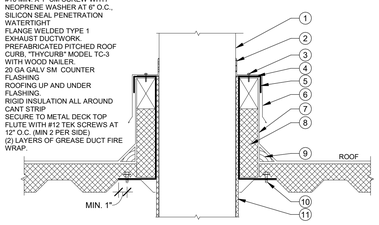

DUCT THRU ROOF | NTS | 7

1. STEEL BANDING 1/2" WIDE MIN. (TYP).
2. 3" MIN. LONGITUDINAL OVERLAP.
3. 3" MIN. PERIMETER OVERLAP.
4. RECTANGULAR FIRE WRAPPED DUCT, SEE PLAN FOR SIZE AND ROUTING.
5. FIRST LAYER 3M FIRE BARRIER DUCT WRAP 20A.
6. SECOND LAYER 3M FIRE BARRIER DUCT WRAP 20A.
7. SEE UPPER ATTACHMENT DETAIL 1/M9.0.1.
8. 3/8"ø THREADED ROD, B-LINE ATR OR EQUAL.
9. 2" WIDE x 18 GA. SHEET METAL STRAP, FOLD OVER ENDS, SECURE TO CHANNEL W/ 3/8"ø BOLT AND CHANNEL NUT AT EACH END.
10. 1-5/8"x1-5/8"x12 GA UNISTRUT CHANNEL, B-LINE B22 OR EQUAL
11. NUT, TOP AND BOTTOM WITH UNISTRUT SQUARE WASHER, B-LINE MODEL B201ZN OR EQUAL.

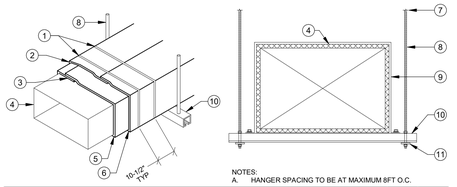

NOTES:
A. HANGER SPACING TO BE AT MAXIMUM 8FT O.C.

DUCT FIRE WRAP DETAIL | NTS | 3

1. RECTANGULAR OR ROUND DUCT, SEE PLAN FOR SIZE.
2. 2" WIDE X 18 GA. GALV SHEET METAL STRAP. FOLD OVER ENDS, SECURE TO CHANNEL WITH 3/8"ø BOLTS WITH NUT AND WASHER AT EACH END.
3. 1-5/8"X1-5/8"X12 GA UNISTRUT CHANNEL, B-LINE B22 OR EQUAL. TYP.
4. CHANNEL POST BASE, B-LINE B280FL OR EQUAL, SECURE TO CURB WITH (2) 3/8"ø STAINLESS STEEL WOOD SCREWS WITH WASHER, MIN. 1" EMBED., SILICONE SEAL PENETRATION WATERTIGHT.
5. 4-HOLE CORNER ANGLE, B-LINE B115 OR EQUAL, SECURE TO UNISTRUT CHANNEL WITH (4) 3/8"ø BOLTS WITH CHANNEL NUTS, TYP.
6. 12" HIGH PREFAB. 18 GA. GALV. STEEL SUPPORT CURB WITH 1-1/2" PRESSURE TREATED WOOD NAILER AND SHEET METAL COUNTERFLASHING, PATE MODEL ES-2 OR EQUAL.
7. CANT STRIP, BOTH LONG SIDES OF CURB.
8. 3/8"ø BOLT, WASHER AND NUT, MAX. 24" O.C., MAX. 3" FROM ENDS, MIN. (2) EACH SIDE OF CURB.
9. C7X9.8 STEEL CHANNEL MINIMUM 12" LONG, PLACE UNDER MIN. (2) FLUTES OF METAL DECK.
10. ROOF FRAMING, SEE STRUCTURAL.

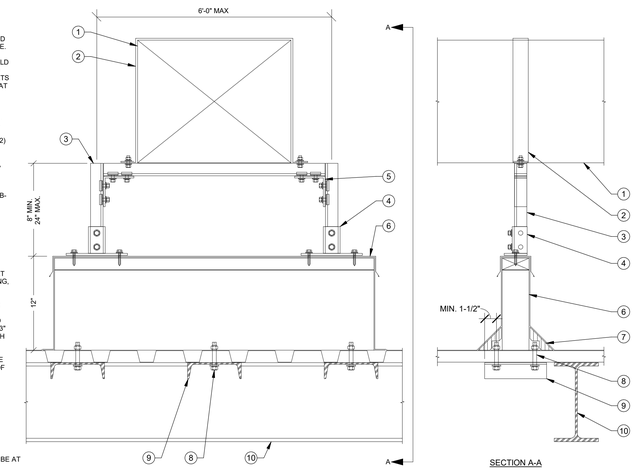

NOTE:
A. SUPPORT SPACING TO BE AT MAXIMUM 8FT O.C.

DUCT SUPPORT ON ROOF | NTS | 11

1. ROOF EXHAUST FAN, SEE SCHEDULES.
2. WOOD NAILER PROVIDED WITH UNIT CURB.
3. #12 TEK SCREWS WITH MIN. 3/4" EMBED. INTO CENTERLINE OF WOOD NAILER, MIN. (2) PER SIDE, SILICONE SEAL PENETRATIONS WATERTIGHT.
4. ROOFING UP AND UNDER FAN FLASHING.
5. UNIT PRESLOPED CURB, SEE SCHEDULES.
6. CANT STRIP.
7. ROOF INSULATION FORMED TO MEET CURB WHERE APPLICABLE, SEE ARCHITECTURAL DRAWINGS.
8. BACKDRAFT DAMPER PROVIDED WITH UNIT, SEE SCHEDULES.
9. DAMPER TRAY PROVIDED WITH UNIT, SEE SCHEDULES.
10. DUCTWORK, FULL SIZE OF CURB OPENING, SEE PLAN FOR ROUTING.
11. C7X9.8 STEEL CHANNEL, PLACE UNDER METAL DECK UNDER PERIMETER OF CURB. SEE STRUCTURAL FOR LENGTH OF CHANNEL AND CONNECTIONS.
12. 1/2"ø BOLT, WASHER AND NUT, MAX 24" O.C., MAX 8" FROM ENDS, MIN. (2) EACH SIDE.

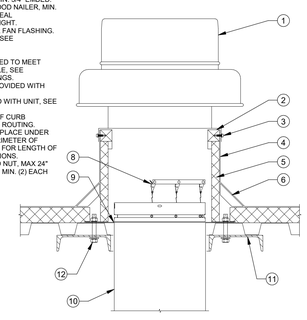

ROOF EXHAUST FAN MOUNTING | NTS | 8

1. TYPE 1 EXHAUST DUCT CONNECTIONS
2. 2" MAX.
3. 1/4" MAX.
4. 16-GAUGE (1/16") BLACK IRON

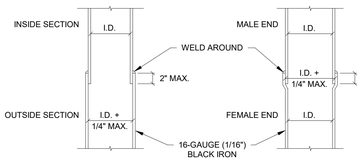

CMC FIGURE 510.5.3.2(1)
TELESCOPING - TYPE DUCT CONNECTION
[NFPA 96: FIGURE 7.5.5.1(A)]

NOTES:
1. DUCT SIZE DECREASES (GOING UPWARD) WITH EACH TELESCOPE.
2. SMALLER (INSIDE) DUCT SHALL BE ABOVE OR UPHILL (ON SLOPED DUCT), TO BE SELF DRAINING INTO LARGER (OUTSIDE) DUCT.

CMC FIGURE 510.5.3.2(2)
BELL - TYPE DUCT CONNECITON
[NFPA 96: FIGURE 7.5.5.1(B)]

NOTES:
1. DUCT SIZE THE SAME THROUGHOUT THE DUCT SYSTEM.
2. SMALLER (INSIDE) MALE DUCT END IS ALWAYS ABOVE OR UPHILL (ON SLOPED DUCT), TO BE SELF DRAINING INTO LARGER (OUTSIDE) FEMALE DUCT END.

TYPE 1 EXHAUST DUCT CONNECTIONS | NTS | 4

IDENTIFICATION STAMP
DIV. OF THE STATE ARCHITECT
APP. 02-122544 INC:
REVIEWED FOR
SS ☐ FLS ☐ ACS ☐
DATE: 09/09/2024

JKAE
architecture + interiors + engineering

MEP & FS / Sustainability / CxA

1209 Pleasant Grove Blvd.
Roseville, CA 95678
p 916-771-0778

www.lpengineers.com
Job #: 23-2066

LP CONSULTING ENGINEERS

SEAL

REGISTERED PROFESSIONAL ENGINEER
RAN ENNIS
M 41413
REN. 03-31-25
MECHANICAL
STATE OF CALIFORNIA

DSA SUBMITTAL

DSA #: 02-122544

Project
SOLANO COMMUNITY COLLEGE
AUTO TECH FACILITY

Drawing Title
MECHANICAL DETAILS

Drawn By: LR/KS
Checked By: RE

NO.	DATE	ISSUE

Project No.: 23-265
©Date: 06-05-2024

DRAWING NO.
M9.0.1

Autodesk Docs://23-265 Autotech Exhaust Replacement/23-2066 Solano Autotech_MEP_23.rvt
8/15/2024 3:42:05 PM

MEP COMPONENT ANCHORAGE NOTE

APPLICABLE CODE: 2022 CBC

ALL MECHANICAL, PLUMBING, AND ELECTRICAL COMPONENTS SHALL BE ANCHORED AND INSTALLED PER THE DETAILS ON THE DSA APPROVED CONSTRUCTION DOCUMENTS. THE FOLLOWING COMPONENTS SHALL BE ANCHORED OR BRACED TO MEET THE FORCE AND DISPLACEMENT REQUIREMENTS PRESCRIBED IN THE 2022 CBC SECTIONS 1617A.1.18 THROUGH 1617A.1.26 AND ASCE 7-16 CHAPTERS 13, 26 AND 30:

1. ALL PERMANENT EQUIPMENT AND COMPONENTS.
2. TEMPORARY, MOVABLE OR MOBILE EQUIPMENT THAT IS PERMANENTLY ATTACHED (E.G. HARD WIRED) TO THE BUILDING UTILITY SERVICES SUCH AS ELECTRICITY, GAS OR WATER. "PERMANENTLY ATTACHED" SHALL INCLUDE ALL ELECTRICAL CONNECTIONS EXCEPT PLUGS FOR 110/220 VOLT RECEPTACLES HAVING A FLEXIBLE CABLE.
3. TEMPORARY, MOVABLE OR MOBILE EQUIPMENT WHICH IS HEAVIER THAN 400 POUNDS OR HAS A CENTER OF MASS LOCATED 4 FEET OR MORE ABOVE THE ADJACENT FLOOR OR ROOF LEVEL THAT DIRECTLY SUPPORT THE COMPONENT IS REQUIRED TO BE RESTRAINED IN A MANNER APPROVED BY DSA.

THE FOLLOWING MECHANICAL AND ELECTRICAL COMPONENTS SHALL BE POSITIVELY ATTACHED TO THE STRUCTURE BUT NEED NOT DEMONSTRATE DESIGN COMPLIANCE WITH THE REFERENCES NOTED ABOVE. THESE COMPONENTS SHALL HAVE FLEXIBLE CONNECTIONS PROVIDED BETWEEN THE COMPONENT AND ASSOCIATED DUCTWORK, PIPING, AND CONDUIT. FLEXIBLE CONNECTIONS MUST ALLOW MOVEMENT IN BOTH TRANSVERSE AND LONGITUDINAL DIRECTIONS:

A. COMPONENTS WEIGHING LESS THAN 400 POUNDS AND HAVE A CENTER OF MASS LOCATED 4 FEET OR LESS ABOVE THE ADJACENT FLOOR OR ROOF LEVEL THAT DIRECTLY SUPPORT THE COMPONENT.
B. COMPONENTS WEIGHING LESS THAN 20 POUNDS, OR IN THE CASE OF DISTRIBUTED SYSTEMS, LESS THAN 5 POUNDS PER FOOT, WHICH ARE SUSPENDED FROM A ROOF OR FLOOR OR HUNG FROM A WALL.

THE ANCHORAGE OF ALL MECHANICAL, ELECTRICAL AND PLUMBING COMPONENTS SHALL BE SUBJECT TO THE APPROVAL OF THE DESIGN PROFESSIONAL IN GENERAL RESPONSIBLE CHARGE OR STRUCTURAL ENGINEER DELEGATED RESPONSIBILITY AND ACCEPTANCE BY DSA. THE PROJECT INSPECTOR WILL VERIFY THAT ALL COMPONENTS AND EQUIPMENT HAVE BEEN ANCHORED IN ACCORDANCE WITH ABOVE REQUIREMENTS.

PIPING, DUCTWORK AND ELECTRICAL DISTRIBUTION SYSTEM BRACING NOTE

APPLICABLE CODE: 2022 CBC

PIPING, DUCTWORK, AND ELECTRICAL DISTRIBUTION SYSTEMS SHALL BE BRACED TO COMPLY WITH THE FORCES AND DISPLACEMENTS PRESCRIBED IN ASCE 7-16 SECTION 13.3 AS DEFINED IN ASCE 7-16 SECTIONS 13.6.5, 13.6.6, 13.6.7, 13.6.8; AND 2022 CBC, SECTIONS 1617A.1.24, 1617A.1.25 AND 1617A.1.26.

THE METHOD OF SHOWING BRACING AND ATTACHMENTS TO THE STRUCTURE FOR THE IDENTIFIED DISTRIBUTION SYSTEM ARE AS NOTED BELOW. WHEN BRACING AND ATTACHMENTS ARE BASED ON A PRE-APPROVED INSTALLATION GUIDE (E.G., HCAI OPM FOR 2013 CBC OR LATER), COPIES OF THE BRACING SYSTEM INSTALLATION GUIDE OR MANUAL SHALL BE AVAILABLE ON THE JOBSITE PRIOR TO THE START OF AND DURING THE HANGING AND BRACING OF THE DISTRIBUTION SYSTEMS. THE STRUCTURAL ENGINEER OF RECORD SHALL VERIFY THE ADEQUACY OF THE STRUCTURE TO SUPPORT THE HANGER AND BRACE LOADS.

MECHANICAL PIPING (MP), MECHANICAL DUCTS (MD), PLUMBING PIPING (PP), ELECTRICAL DISTRIBUTION SYSTEMS (E):

MP	MD	PP	E	
☐	☐	☐	☒	OPTION 1: DETAILED ON THE APPROVED DRAWINGS WITH PROJECT SPECIFIC NOTES AND DETAILS.
☐	☐	☐	☐	OPTION 2: SHALL COMPLY WITH HCAI (OSHPD) PRE-APPROVAL (OPM#) #_____. AS INDICATED IN THESE DRAWINGS WITH PROJECT-SPECIFIC NOTES AND DETAILS.

GENERAL NOTES

ALL GENERAL NOTES SHOWN BELOW ARE NOT NECESSARILY USED ON PLANS IF NOT REQUIRED.

1. THESE GENERAL NOTES ARE INTENDED TO ASSIST THE CONTRACTOR IN THE EXECUTION OF THE ELECTRICAL WORK AND TO BE INCLUDED IN CONJUNCTION WITH THE CONTRACT DOCUMENT DRAWINGS AND SPECIFICATION REQUIREMENTS. SOME OF THE GENERAL NOTES ARE EXCERPTS FROM THE SPECIFICATION.
2. PROCURE PERMITS AND LICENSES REQUIRED. PAY ALL NECESSARY FEES AND ARRANGE FOR INSPECTIONS REQUIRED BY LOCAL CODES AND ORDINANCES AND UTILITY COMPANIES.
3. COORDINATE ALL ELECTRICAL SERVICES WITH THE RESPECTIVE UTILITY COMPANIES AND PROVIDE ALL TRENCHING, CONDUITS, WIRING, METER FACILITIES AND OUTLETS REQUIRED BY THEM.
4. WORKMANSHIP SHALL BE OF THE HIGHEST GRADE. DEFECTIVE EQUIPMENT OR EQUIPMENT DAMAGED IN THE COURSE OF INSTALLATION OR TEST SHALL BE REPLACED OR REPAIRED IN A MANNER MEETING WITH THE ACCEPTANCE OF THE ARCHITECT.
5. INSTALL ALL EQUIPMENT, CONDUITS, OUTLETS, AND FIXTURES IN STRICT ACCORDANCE WITH THE CURRENT EDITION OF ALL APPLICABLE CODES (CEC, STATE, COUNTY AND CITY).
6. DO NOT SCALE PLANS FOR FIXTURES, DEVICES, OR APPLIANCE LOCATIONS. USE FIGURED DIMENSIONS IF GIVEN OR CHECK MECHANICAL AND ARCHITECTURAL PLANS. ALSO REFER TO ACTUAL ON-SITE CONDITIONS.
7. ALL MATERIAL AND EQUIPMENT IS TO BE LISTED AND INSTALLED PER MANUFACTURER'S SPECIFICATIONS AND CEC 110.3.
8. ALL ELECTRICAL DEVICES AND EQUIPMENT, FIXTURES, CONDUITS AND WIRING SHOWN ON THESE PLANS ARE NEW, UNLESS OTHERWISE NOTED.
9. OUTLET BOXES INSTALLED IN FIRE WALLS SHALL BE ONE-PIECE STEEL AND INSTALLED IN SEPARATE (STAGGERED) STUD PENETRATIONS, MINIMUM 24 INCHES HORIZONTAL SEPARATION. FIRE WALLS SHALL BE MADE IN ACCORDANCE WITH CBC AND ELECTRICAL CODES.
10. THE FINAL LOCATION OF ALL OUTLETS SHALL BE VERIFIED WITH THE ARCHITECT AND/OR OWNER AT TIME OF CONSTRUCTION.
11. ALL OUTDOOR ELECTRICAL EQUIPMENT SHALL BE WEATHER-PROTECTED.
12. CONTRACTOR SHALL VERIFY THAT ALL LIGHTING FIXTURES, CEILING TRIMS, AND FRAMES ARE COMPATIBLE WITH CEILING SYSTEM INSTALLED.
13. CONTRACTOR SHALL COORDINATE LIGHT FIXTURE LOCATIONS AND INSTALLATIONS WITH THE MECHANICAL CONTRACTOR. MAINTAIN REQUIRED CLEARANCES (MINIMUM 3 INCHES) BETWEEN THE LIGHT FIXTURES AND MECHANICAL DUCTS OR EQUIPMENT FOR PROPER OPERATION, INSTALLATION AND/OR SERVICING OF FIXTURES.
14. BEFORE SUBMITTING FOR ARCHITECT'S REVIEW AND PLACING ORDER FOR THE LIGHT FIXTURES. THE CONTRACTOR SHALL VERIFY THE VOLTAGE OF ALL THE LIGHTING FIXTURES TO MATCH THE VOLTAGE OF THE SERVICE PANEL, WHETHER THE VOLTAGE FOR THE LIGHT FIXTURES ARE SHOWN ON THE PLAN OR NOT.
15. PLACEMENT AND CIRCUITING OF EXIT SIGNS AND EGRESS LIGHTING COMPLY WITH CBC REQUIREMENTS.
16. ALL CONDUIT SHALL BE ROUTED CONCEALED UNLESS NOTED ON PLAN OR ACCEPTED BY THE ARCHITECT.
17. PROVIDE ALL NECESSARY SLEEVES AND INSERTS FOR ALL WORK PASSING THROUGH OR ATTACHING TO WALLS, FLOORS, OR CEILINGS.
18. ALL WIRING SHALL BE INSTALLED IN RIGID METALLIC CONDUIT, UNLESS OTHERWISE NOTED. CONDUITS INSTALLED CONCEALED IN WALL AND CEILING MAY BE EMT WITH STEEL COMPRESSION TYPE FITTINGS. PVC WHERE INSTALLED UNDERGROUND AND/OR UNDER SLAB. ALL EXPOSED CONDUITS SHALL BE RIGID STEEL CONDUITS WITH THREADED TYPE FITTINGS. INSTALL ALL CONDUITS IN ACCORDANCE WITH CECA STANDARDS OF INSTALLATION.
19. ELECTRICAL NON-METALLIC TUBING (ENT) AND MC CABLE ARE NOT PERMITTED TO BE USED FOR THIS PROJECT, NO EXCEPTIONS.
20. WHERE EXISTING CONDUITS, CONCEALED OR EXPOSED, AND (WIREMOLD) SURFACE RACEWAY IS NOT IN PLACE AS SHOWN ON PLANS, PROVIDE NEW CONDUITS AND (WIREMOLD) SURFACE RACEWAY FOR THE NEW WORK. VERIFY EXISTING CONDITION ON SITE AND PROVIDE ALL NECESSARY NEW MATERIAL, APPARATUS, AND WORK THAT ARE REQUIRED TO BE INCLUDED IN THE BID PACKAGE.
21. CONDUCTORS, #8 AND LARGER, SHALL BE STRANDED COPPER WITH THHN/THWN INSULATION, UNLESS OTHERWISE NOTED.
22. PROVIDE WORKING CLEARANCE PER CEC 110.26 FOR SERVICE PANEL, SUBPANELS, MOTOR DISCONNECT SWITCHES, CONTROL SECTIONS. HVAC EQUIPMENT, APPLIANCES, ETC.
23. PROVIDE A WARNING LABEL (SIGN) CLEARLY VISIBLE TO QUALIFIED PERSONS TO COMPLY WITH NEC AND CEC 116.16 OF POTENTIAL ELECTRIC ARC FLASH HAZARDS AT SERVICE EQUIPMENT, PANELBOARDS, INDUSTRIAL CONTROL PANELS AND MOTOR CONTROL CENTERS THAT ARE LIKELY TO REQUIRE EXAMINATION, ADJUSTMENT, SERVICING, OR MAINTENANCE WHILE ENERGIZED. SERVICE EQUIPMENT SHALL BE LEGIBLY MARKED WITH THE MAXIMUM AVAILABLE FAULT CURRENT PER CEC SECTION 110.24(A).
24. BUILDING SERVICE AND SUBPANELS TO COMPLY WITH CEC 110.9 AND 110.10 INTERRUPTING RATING AND BRACING. PROVIDE A.I.C. CALCULATIONS FOR SUBPANELS IF INTERRUPTING RATING TO BE USED IS LOWER THAN MAIN SERVICE RATING.
25. ALL APPLIANCES SHALL COMPLY WITH CEC ARTICLE 422. APPLIANCE CONTROL AND PROTECTION PER CEC 422-III; BRANCH CIRCUITS PER 422-II.
26. BUILDING EXPANSION JOINTS MAY OR MAY NOT BE INDICATED ON THE ELECTRICAL DRAWINGS. VERIFY THE LOCATIONS OF ALL APPLICABLE BUILDING EXPANSION JOINTS WITH THE ARCHITECTURAL DRAWINGS. WIRING METHODS ACROSS EXPANSIONS JOINTS SHALL INCLUDE USE OF FLEXIBLE FITTINGS OR OTHER DEVICES AS APPROPRIATE TO EACH APPLICATION. IN NO CASE SHALL CONDUIT CROSS SUCH A JOINT IN BUILDING CONSTRUCTION WITHOUT USE OF THE APPROPRIATE WIRING METHODS.
27. CONTRACTOR SHALL SIZE ALL THE INTERIOR AND EXTERIOR BUILDING PULL BOXES AND UNDERGROUND PULL BOXES PER CEC 314.16 AND COMPLY WITH CEC 314.28 FOR INSTALLATION OF RACEWAYS AND WIRING AS REQUIRED BY CODE, UNLESS OTHERWISE NOTED.
28. WHERE ACCESSIBILITY IS NOT AVAILABLE TO ELECTRICAL OUTLETS, DEVICES AND/OR EQUIPMENT, COORDINATE WITH THE ARCHITECT FOR PROVISIONS TO PROVIDE ACCESSIBILITY TO THEM.
29. CONTRACTOR IS RESPONSIBLE FOR REVIEWING THE MECHANICAL DRAWINGS AND PROVIDES ALL CONDUITS AND CONTROL WIRING AND POWER WIRING SHOWN ON THE MECHANICAL DRAWINGS THAT IS NOT SHOWN ON THE ELECTRICAL PLANS.
30. CONTRACTOR SHALL REFER TO THE MECHANICAL DRAWINGS AND COORDINATE FOR THE EQUIPMENT LOCATIONS. COORDINATE ROOF PENETRATION WITH THE MECHANICAL CONTRACTOR FOR MECHANICAL CONNECTIONS. ENTER ROOF MOUNTED UNITS THROUGH EQUIPMENT MOUNTING CURBS WHERE POSSIBLE. VERIFY ON-SITE.
31. PROVIDE CONVENIENCE OUTLET WITHIN 25 FEET OF MECHANICAL EQUIPMENT PER U.M.C. WHERE LOCATED OUTSIDE, PROVIDE WEATHERPROOF AND GFCI CONVENIENCE OUTLET. SECURE ROOF MOUNTED OUTLET TO THE MECHANICAL EQUIPMENT. VERIFY LOCATION IN FIELD WITH THE MECHANICAL CONTRACTOR.
32. VERIFY SINGLE-POINT CONNECTIONS TO ROOF MOUNTED HVAC UNITS WITH MECHANICAL CONTRACTOR ON-SITE PRIOR TO ELECTRICAL ROUGH-IN. PROVIDE DUAL DISCONNECTS IF TWO-POINT CONNECTIONS IS REQUIRED, WHETHER SHOWN ON PLANS OR NOT.
33. VERIFY SINGLE-POINT CONNECTIONS TO ROOF MOUNTED HVAC UNITS WITH MECHANICAL CONTRACTOR ON-SITE PRIOR TO ELECTRICAL ROUGH-IN. PROVIDE DUAL DISCONNECTS IF TWO-POINT CONNECTIONS IS REQUIRED, WHETHER SHOWN ON PLANS OR NOT.
34. COORDINATE THE HVAC EQUIPMENT FOR FUSES REQUIRE. WHERE FUSES ARE REQUIRED, VERIFY FUSE SIZE ON-SITE AND PROVIDE FOR HVAC EQUIPMENT PER UNIT NAMEPLATE SPECIFICATIONS.
35. MOTOR DISCONNECT SWITCHES SHALL COMPLY WITH CEC 430-IX AND 440.11.
36. MOTOR STARTERS FOR HVAC EQUIPMENT ARE PROVIDED BY MECHANICAL CONTRACTOR AND CONNECTED BY ELECTRICAL CONTRACTOR, UNLESS NOTED OTHERWISE.
37. ALL CONNECTIONS FROM THE DISCONNECT SWITCHES TO HVAC UNITS SHALL BE COPPER CONDUCTORS. MOTOR DISCONNECT SWITCHES SHALL COMPLY WITH CEC 430-VII, 430-VIII, AND 440-II.
38. VERIFY LOCATION AND HEIGHT OF ALL MECHANICAL OR FIXTURE EQUIPMENT OUTLETS WITH SUPPLIER PRIOR TO ANY ROUGH-IN WORK. PROVIDE ALL RUNS AND CONNECTIONS TO EQUIPMENT.
39. ALL TERMINATION PROVISIONS OF EQUIPMENT, INCLUDING CIRCUITS RATED 100 AMPERES OR LESS SHALL BE RATED AT 60 DEGREE, CENTIGRADE PER CEC 110.14(c).
40. ALL LIGHT FIXTURES INSTALLED OVER FOOD HANDLING OR FOOD PREPARATION AREAS, OPEN FOOD STORAGE, AND UTENSIL WASHING AREAS SHALL BE OF SHATTERPROOF CONSTRUCTION OR SHALL BE PROTECTED WITH SHATTERPROOF SHIELDS AND SHALL BE READILY CLEANABLE.

DEMOLITION GENERAL NOTES

ALL DEMOLITION GENERAL NOTES SHOWN BELOW ARE NOT NECESSARILY USED ON PLANS IF NOT REQUIRED.

1. ALL EXISTING EQUIPMENT, DEVICES, CONDUIT AND WIRING, ETC., WHERE SHOWN ON PLANS ARE BASED ON AVAILABLE EXISTING DOCUMENTS AND LIMITED SITE SURVEYS AND ARE SHOWN FOR CLARITY. IT SHALL BE REGARDED AS AN APPROXIMATION ONLY. CONSTRUCTION CONTRACTOR AGREES THAT IN ACCORDANCE WITH GENERALLY ACCEPTED CONSTRUCTION PRACTICES, THE CONTRACTOR WILL BE REQUIRED TO ASSUME SOLE AND COMPLETE RESPONSIBILITY FOR JOB SITE CONDITIONS DURING THE COURSE OF CONSTRUCTION OF THE PROJECT. PRIOR TO SUBMITTING BID AND BEFORE START OF ANY ELECTRICAL WORK, CONTRACTOR SHALL VERIFY ON-SITE ALL EXISTING LOCATIONS AND CONDITIONS TO ASCERTAIN ALL WORK REQUIRED.
2. EXISTING ELECTRICAL MAIN SERVICE IS BEING REPLACED WITH NEW THAT IS TO BE INCLUDED IN THE SCOPE OF WORK. CONTRACTOR SHALL VERIFY AND COORDINATE. THE SEQUENCE OF WORK WITH THE LOCAL UTILITY COMPANY, THE OWNER/DISTRICTS REPRESENTATIVE AND OTHER TRADES AT THE EARLIEST START OF CONSTRUCTION FOR ALL REQUIREMENT AND SCHEDULE THE REQUIRED WORK FOR A SMOOTH AND TIMELY TRANSFORMATION FROM THE EXISTING SERVICE TO THE NEW SERVICE TO ENSURE THAT ALL WORK PROCEED WITH A MINIMUM OF INTERFERENCE AND DELAY. LIMIT THE ELECTRICAL SHUTDOWN TO A MINIMAL SO IT WILL NOT AFFECT THE EXISTING FACILITY'S NORMAL DAILY FUNCTIONS AND OPERATION.
3. CAUSE AS LITTLE INTERFERENCE OR INTERRUPTION OF EXISTING UTIILITIES AND/OR OTHER EXISTING FACILITY'S SYSTEMS AND SERVICES AS POSSIBLE. CONTRACTOR SHALL NOTIFY THE OWNER/DISTRICT'S REPRESENTATIVE AT LEAST 72 HOURS TO SCHEDULE ALL NECESSARY SHUTDOWN. SHUTDOWN WORK SHALL BE PERFORMED AFTER THE NORMAL OPERATION HOURS OF THE FACILITY, IF SO DIRECTED BY THE OWNER/DISTRICT'S REPRESENTATIVE.
4. ALL REMOVED AND/OR DEMOLISHED ELECTRICAL MATERIALS AND EQUIPMENT TO BE ACCOMPLISHED UNDER THIS CONTRACT, WHICH IN THE OPINION OF THE OWNER/DISTRICT'S REPRESENTATIVE ARE DEEM SALVAGEABLE, SHALL REMAIN THE PROPERTY OF THE OWNER/DISTRICT. ALL ELECTRICAL MATERIAL AND EQUIPMENT CONSIDERED NOT SALVAGEABLE SHALL BE REMOVED FROM THE SITE AND DISPOSED BY THE CONTRACTOR ACCORDINGLY.
5. WHERE REMOVAL OF AN EXISTING SYSTEM'S DEVICE WILL RESULT IN LOSS OF CIRCUIT CONTINUITY, THE ISOLATED PORTIONS OF THE CIRCUIT SHALL BE RECONNECTED TO PROVIDE SERVICE TO ALL REMAINING DEVICES. IF SITE CONDITIONS MAKE RECONNECTION IMPOSSIBLE, CONNECTION SHALL BE MADE FROM AN ADJACENT AVAILABLE DEVICE AS NOTED AND/OR AS DIRECTED BY THE ARCHITECT AND/OR THE OWNER/DISTRICT'S REPRESENTATIVE.
6. WHERE EXISTING CONCEALED CONDUITS, WHETHER SHOWN OR NOT, OR SPECIFIED TO BE REUSED, WHICH BECAME EXPOSED DUE TO CONSTRUCTION CHANGES, IT SHALL BE REROUTED TO THE NEAREST AVAILABLE REUSED OUTLET.
7. ALL EXISTING EXPOSED CONDUITS AND/OR WIRING THAT ARE DETERMINED BY THE DISTRICT AND ARCHITECT TO BE MAINTAINED FOR EXISTING SYSTEM FUNCTION AND CONTINUITY, WHETHER SHOWN ON PLAN OR NOT, ARE TO BE REROUTED, CONCEALED IN WALL AND/OR CEILING FOR A CLEAN FINISHED SURFACE WITH NO EXPOSED CONDUITS AND/OR WIRING WITHIN THE REMODELED AREA.
8. REMOVE ALL EXISTING EXPOSED CONDUITS, WIRING, ELECTRICAL OUTLETS, DEVICES AND EQUIPMENT THAT ARE DETERMINED BY THE DISTRICT AND ARCHITECT TO BE NON FUNCTIONAL AND/OR NOT BEING USED FROM WITHIN THE REMODELED ARE FOR A CLEAN FINISHED SURFACE.
9. WHERE EXISTING WIRING OR EQUIPMENT IS ABANDONED AS A RESULT OF THIS CONTRACT, IT SHALL BE REMOVED INSOFAR AS POSSIBLE, THIS INCLUDES BUT IS NOT LIMITED TO:
   A. REMOVE ALL WIRE AND CABLE.
   B. REMOVE ALL DEVICES AND EQUIPMENT.
   C. REMOVE ALL EXPOSED CONDUIT AND CONDUIT IN ACCESSIBLE CONCEALED AREA, AS FAR AS POSSIBLE.
   D. CUT OFF AND CAP ALL ABANDONED CONDUIT. STUBS SHALL NOT BE PROTRUDED ABOVE FLOOR AND/OR FINISHED WALLS AND CEILINGS.
10. WHEREVER EXISTING ELECTRICAL DEVICES, PANELS, CONDUITS, CABLES, ETC., CONFLICT WITH REMODEL WORK, WHETHER SHOWN OR NOT, RELOCATE THESE ITEMS AS DIRECTED BY THE ARCHITECT AND/OR OWNER/DISTRICT'S REPRESENTATIVE.
11. WHERE SHOWN ON PLAN FOR REMOVAL OF EXISTING CONDUITS. REMOVE ALL PORTIONS OF CONDUITS WHERE IT IS ACCESSIBLE AND ABANDON PORTIONS OF CONDUITS WHERE IT IS INACCESSIBLE. CUT AND/OR FINISHED WALLS AND CEILINGS.
12. CONTRACTOR SHALL UPDATE WITH NEW TYPED WRITTEN PANEL DIRECTORIES TO EXISTING PANELS INVOLVED IN THIS RENOVATION WORK THAT SHALL REFLECT ALL CHANGES TO THE CIRCUIT DESIGNATIONS.
13. PROVIDE AND INSTALL PROTECTIVE COVERING OVER EXISTING EQUIPMENT IN AREA WHEN INSTALLING ANY NEW WORK.
14. COORDINATE WITH OTHER TRADES AND PROMPTLY TRANSMIT ALL INFORMATION REQUIRED BY THEM. COORDINATE THE SEQUENCE OF DEMOLITION WITH OTHER TRADES TO ENSURE THAT ALL WORK PROCEEDS WITH A MINIMUM OF INTERFERENCE AND DELAY.
15. REFER TO MECHANICAL AND PLUMBING DRAWING FOR HEATERS, EXHAUST FANS, WATER HEATERS, PUMPS, AND ETC., WHICH REQUIRE TO BE DISCONNECTED BY THE ELECTRICAL CONTRACTOR FOR REMOVAL OR ABANDONMENT BY THE MECHANICAL AND/OR PLUMBING CONTRACTOR. THE ELECTRICAL CONTRACTOR SHALL COORDINATE THE SEQUENCE FOR WORK WITH THE MECHANICAL AND/OR PLUMBING FOR REMOVAL OF ALL APPLICABLE STARTERS. DISCONNECT SWITCHES AND ASSOCIATED CONDUIT AND WIRING.
16. ALL LIGHT FIXTURES INDICATED AS RELOCATED SHALL BE CLEANED AND RE-LAMPED PRIOR TO THE RE-INSTALLATION.

ELECTRICAL ABBREVIATIONS

ABBREV	DESCRIPTION	ABBREV	DESCRIPTION
A, AMP	AMPERES	MAX	MAXIMUM
AC	ABOVE COUNTER	MC	METAL-CLAD CABLE
AF/AT	AMPERE FRAME / AMPERE TRIP	MCA	MINIMUM CIRCUIT AMPACITY
AFCI	ARC FAULT CIRCUIT INTERRUPTER	MCB	MAIN CIRCUIT BREAKER
AFF	ABOVE FINISHED FLOOR	MCC	MOTOR CONTROL CENTER
AHJ	AUTHORITY HAVING JURISDICTION	MGB	MAIN GROUND BAR
AIC	AMPERE INTERRUPTING CAPACITY	MG SET	MOTOR-GENERATOR SET
AL	ALUMINUM	MLO	MAIN LUGS ONLY
ANSI	AMERICAN NATIONAL STANDARDS INSTITUTE	MOCP	MAXIMUM OVERCURRENT PROTECTION
AS/AF	AMPERE SWITCH / AMPERE FUSE	MPOE	MINIMUM POINT OF ENTRY
AT	AMPERE TRIP RATING OF BREAKER	MS	MOTION SENSOR
AUTO	AUTOMATIC	MSB	MAIN SWITCHBOARD
ATS	AUTOMATIC TRANSFER SWITCH	MTD	MOUNTED
AWG	AMERICAN WIRE GAUGE	MTS	MANUAL TRANSFER SWITCH
BMS	BUILDING MANAGEMENT SYSTEM	MV	MEDIUM VOLTAGE CABLE
C, CDT	CONDUIT	MW	MEGAWATTS
CATV	COMMUNITY ANTENNA TELEVISION	(N)	NEW
CB	CIRCUIT BREAKER	NECA	NATIONAL ELECTRICAL CONTRACTORS ASSOCIATION
CEC	CALIFORNIA ELECTRICAL CODE	NEMA	NATIONAL ELECTRICAL MANUFACTURERS ASSOCIATION
CFL	COMPACT FLUORESCENT	NIC	NOT IN CONTRACT
CFCI	CONTRACTOR FURNISHED, CONTRACTOR INSTALLED	NL	NIGHT LIGHT
CKT	CIRCUIT	NRTL	NATIONALLY RECOGNIZED TESTING LABORATORIES
cmil	CIRCULAR MIL	NTS	NOT TO SCALE
CO	CONDUIT ONLY w/PULL STRING	OC	ON CENTER
CSFM	CALIFORNIA STATE FIRE MARSHALL	OCPD	OVERCURRENT PROTECTIVE DEVICE
CT	CURRENT TRANSFORMER	OFCI	OWNER FURNISHED CONTRACTOR INSTALLED
CU	COPPER	OFOI	OWNER FURNISHED, OWNER INSTALLED
DET	DETAIL	PH, P	PHASE OR POLE
DISC	DISCONNECT	PB	PULL BOX
DIST	DISTRIBUTION	PF	POWER FACTOR
DWG	DRAWING	PFB	PROVIDE FOR FUTURE BREAKER
EC	ELECTRICAL CONTRACTOR	PIV	POST INDICATOR VALVE
EGC	EQUIPMENT GROUNDING CONDUCTOR	PLC	PROGRAMMABLE LOGIC CONTROLLERS
ELEV, EL	ELEVATION	PNL	PANEL
EM, EMERG	EMERGENCY	PoE	POWER OVER INTERNET
EMT	ELECTRICAL METALLIC TUBING	PV	PHOTOVOLTAICS
ENT	ELECTRICAL NONMETALLIC TUBING	PVC	POLYVINYL CHLORIDE
EOL	END OF LINE RESISTOR	PWR	POWER
EPO	EMERGENCY POWER OFF	(R)	RELOCATED
EQPT	EQUIPMENT	RCP	REFLECTED CEILING PLAN
EV	ELECTRIC VEHICLE	REC, RECPT	RECEPTACLE
EVSE	ELECTRIC VEHICLE SUPPLY EQUIPMENT	REQD	REQUIRED
EXH	EXHAUST	RGSC	RIGID GALVANIZED STEEL CONDUIT
(E)	EXISTING	RMC	RIGID METAL CONDUIT
(F)	FUTURE	RMS	ROOT-MEAN-SQUARE
FACP	FIRE ALARM CONTROL PANEL	SCADA	SUPERVISORY CONTROL AND DATA ACQUISITION
FBO	FURNISHED BY OTHERS	SCR	SILICON CONTROLLED RECTIFIER
FF	FINISHED FLOOR	SHLD	SHIELDED
FG	FINISHED GRADE	SPD	SURGE-PROTECTIVE DEVICE
FLA	FULL LOAD AMPS	SPECS	SPECIFICATIONS
FLEX	FLEXIBLE	SW	SWITCH
FLUOR	FLUORESCENT	T, XFMR	TRANSFORMER
FMC	FLEXIBLE METAL CONDUIT	TEMP	TEMPORARY
FMT	FLEXIBLE METAL TUBING	THHN	THERMOPLASTIC, HEAT RESISTANT CABLE, NYLON JACKET OUTER SHEATH
GEC	GROUNDING ELECTRODE CONDUCTOR	THWN	THERMOPLASTIC, HEAT AND MOISTURE RESISTANT CABLE, NYLON JACKET OUTER SHEATH
GFCI	GROUND-FAULT CURRENT INTERRUPTER	TR	TAMPER-RESISTANT
GFPE	GROUND-FAULT PROTECTION OF EQUIPMENT	TS	TAMPER SWITCH
GND	GROUND	TSTAT	THERMOSTAT
HID	HIGH INTENSITY DISCHARGE	TYP	TYPICAL
HP	HORSEPOWER	UG	UNDERGROUND
HVAC	HEATING, VENTILATION & AIR CONDITIONING	UGPS	UNDERGROUND PULL SECTION
Hz	HERTZ (cycle per second)	UL	UNDERWRITERS LABORATORIES
IEEE	INSTITUTE OF ELECTRICAL AND ELECTRONICS ENGINEERS	UNO	UNLESS NOTED OTHERWISE
IG	ISOLATED GROUND	UPS	UNINTERRUPTIBLE POWER SUPPLY
IMC	INTERMEDIATE METAL CONDUIT	USB	UNIVERSAL SERIAL BUS
ISC, SC	SHORT CIRCUIT	VFD	VARIABLE FREQUENCY DRIVE
ISOL	ISOLATED	V	VOLTS
JBOX	JUNCTION BOX	VA	VOLT-AMPERE
kcmil	ONE THOUSAND CIRCULAR MILS	Vac	VOLTS ALTERNATING CURRENT
kV	KILOVOLTS	Vdc	VOLTS DIRECT CURRENT
kW	KILOWATTS	VNEM	VIRTUAL NET ENERGY METERING
kVA	KILOVOLT-AMPERES	W	WATTS
LED	LIGHT-EMITTING DIODE	W-hr	WATT-HOUR
LCP	LIGHTING CONTROL PANEL	w/	WITH
LPG	LIQUEFIED PETROLEUM GAS	WP	WEATHERPROOF
LRC	LOCKED-ROTOR CURRENT	WPL	WEATHERPROOF LOCKING
LSIG	LONG-TIME, SHORT-TIME, INSTANTANEOUS & EQUIPMENT GROUND-FAULT PROTECTION	WPU	WEATHERPROOF WHILE IN USE
LTG	LIGHTING	WR	WEATHER RESISTANT
		(X)	REMOVE OR DEMO

APPLICABLE CODES AND STANDARDS

- "2022 CALIFORNIA BUILDING CODE" (CBC).
- "2022 CALIFORNIA ELECTRICAL CODE" (CEC).
- "2022 CALIFORNIA ENERGY CODE" (TITLE 24 - PART 6).
- "2022 CALIFORNIA GREEN BUILDING STANDARDS CODE" - CALGreen (TITLE 24 - PART 11).

PROJECT ELECTRICAL SCOPE OF WORK

DESCRIPTION:
PROVIDE ELECTRICAL CONNECTIONS TO NEW VEHICLE EXHAUST FAN (VEF-1 & VEF-2) INCLUDING NEW MOTORIZED HOSE REEL.

ELECTRICAL SHEET INDEX

SHEET NUMBER	SHEET NAME
E0.0.1	ELECTRICAL ABBREVIATIONS, SHEET LIST & NOTES
E0.0.2	ELECTRICAL LEGEND
E2.0.1	ELECTRICAL DEMO POWER PLAN
E2.1.1	ELECTRICAL POWER PLAN
E5.0.1	ELECTRICAL ROOF PLAN
E7.0.1	ELECTRICAL PANEL SCHEDULES
E8.0.1	ELECTRICAL DETAILS
E9.0.1	ELECTRICAL SPECIFICATIONS
E9.0.2	ELECTRICAL SPECIFICATIONS

IDENTIFICATION STAMP
DIV. OF THE STATE ARCHITECT
APP. 02-122544 INC:
REVIEWED FOR
SS ☒ FLS ☒ ACS ☒
DATE: 09/09/2024

JKAE
architecture + interiors + engineering

LP CONSULTING ENGINEERS
MEP & FS / Sustainability / CxA
1209 Pleasant Grove Blvd.
Roseville, CA 95678
p 916-771-0778
www.lpengineers.com
Job #: 23-2066

SEAL

REGISTERED PROFESSIONAL ENGINEER
RAMI S. ZEID
No. E 16762
EXP. 9-30-24
ELECTRICAL
STATE OF CALIFORNIA

DSA SUBMITTAL

DSA #: 02-122544

Project: SOLANO COMMUNITY COLLEGE
AUTO TECH FACILITY

Drawing Title
ELECTRICAL ABBREVIATIONS, SHEET LIST & NOTES

Drawn By: RSP
Checked By: RZ
Project No.: 23-265
Date: 06-05-2024

NO.	DATE	ISSUE

DRAWING NO.
E0.0.1

Autodesk Docs://23-265 Autotech Exhaust Replacement/23-2066 Solano Autotech_MEP_r23.rvt
9/3/2024 9:06:06 AM

ELECTRICAL SYMBOL LEGEND

ALL SYMBOLS SHOWN IN THIS LEGEND ARE NOT NECESSARY USED ON PLANS IF NOT REQUIRED

SYMBOL	DESCRIPTION
	POWER
	MAIN SWITCHBOARD OR DISTRIBUTION PANEL, PAD OR FLOOR MOUNTED, AS NOTED
	RECESSED MOUNTED LIGHTING OR DISTRIBUTION PANEL
	SURFACE MOUNTED LIGHTING OR DISTRIBUTION PANEL
	RECESSED TERMINAL CABINET w/ 3/4"C PLYWOOD BACKBOARD, DUPLEX RECEPTACLE & #6 CU GND, UNO
	SURFACE MOUNTED TERMINAL CABINET w/ 3/4"C PLYWOOD BACKBOARD, DUPLEX RECEPTACLE & #6 CU GND, UNO
T	DISTRIBUTION TRANSFORMER, MOUNTING AND SIZE AS NOTED
	NON-FUSED DISCONNECT SWITCH
	ENCLOSED CIRCUIT BREAKER DISCONNECT SWITCH
	FUSED DISCONNECT SWITCH; SIZE DISCONNECT AND FUSES PER UNIT LABEL
	MOTOR STARTER/CONTROLLER
	COMBINATION CIRCUIT BREAKER DISCONNECT/MOTOR STARTER
	COMBINATION FUSIBLE DISCONNECT/MOTOR CONTROLLER; PROVIDE FUSES PER MANUFACTURER'S REQUIREMENTS. "NF" INDICATES NON-FUSED
	POWER POINT OF CONNECTION
A	DUPLEX RECEPTACLE OUTLET 20A, 125V, @ +16" TO BOTTOM OF BOX, UNO. SUBSCRIPT TEXT WHERE OCCURS, SEE RECEPTACLE SUBSCRIPT LEGEND BELOW.
	DUPLEX RECEPTACLE MOUNTED ABOVE COUNTER TOP [1]
	ISOLATED GROUND DUPLEX RECEPTACLE, 20A, 125V @ +16" TO BOTTOM OF BOX, UNO.
	DEDICATED DUPLEX RECEPTACLE OUTLET 20A, 125V, @ +16" TO BOTTOM OF BOX, UNO
	GFCI DUPLEX RECEPTACLE OUTLET 20A, 125V, @ +16" TO BOTTOM OF BOX, UNO
	GFCI DUPLEX RECEPTACLE OUTLET MOUNTED ABOVE COUNTER TOP AND/OR SINK BACKSPLASH [1]
	ISOLATED GROUND GFCI DUPLEX RECEPTACLE OUTLET 20A, 125V, @ +16" TO BOTTOM OF BOX, UNO
	DEDICATED GFCI DUPLEX RECEPTACLE OUTLET 20A, 125V, @ +16" TO BOTTOM OF BOX, UNO
	FOURPLEX RECEPTACLE OUTLET 20A, 125V, @ +16" TO BOTTOM OF BOX, UNO.
	FOURPLEX RECEPTACLE OUTLET MOUNTED ABOVE COUNTER TOP [1]
	ISOLATED GROUNDED DOUBLE DUPLEX RECEPTACLE 20A, 125V @ +16" TO BOTTOM OF BOX, UNO
	DEDICATED DOUBLE DUPLEX RECEPTACLE OUTLET 20A, 125V, @ +16" TO BOTTOM OF BOX, UNO
	GFCI DOUBLE DUPLEX RECEPTACLE OUTLET 20A, 125V, @ +16" TO BOTTOM OF BOX, UNO
	GFCI DOUBLE DUPLEX RECEPTACLE OUTLET MOUNTED ABOVE COUNTER TOP AND/OR SINK BACKSPLASH [1]
	ISOLATED GROUND GFCI DOUBLE DUPLEX RECEPTACLE OUTLET 20A, 125V, @ +16" TO BOTTOM OF BOX, UNO
	DEDICATED GFCI DOUBLE DUPLEX RECEPTACLE OUTLET 20A, 125V, @ +16" TO BOTTOM OF BOX, UNO
	SPECIAL RECEPTACLE OUTLET, SIZE AND NEMA CONFIGURATION AS NOTED, MOUNTED @ +16" TO BOTTOM OF BOX, UNO
	FLOOR MOUNTED DUPLEX RECEPTACLE, 20A, 125V FLUSH IN FINISHED FLOOR
	FLOOR MOUNTED DOUBLE DUPLEX RECEPTACLE, 20A, 125V FLUSH IN FINISHED FLOOR
	CEILING MOUNTED DUPLEX RECEPTACLE, 20A, 125V
	CEILING MOUNTED DOUBLE DUPLEX RECEPTACLE, 20A, 125V
	FLOOR MOUNTED COMBINATION DUPLEX RECEPTACLE / TELECOM
	FLOOR MOUNTED COMBINATION DOUBLE DUPLEX RECEPTACLE / TELECOM
	FLOOR MOUNTED COMBINATION POWER AND TELECOM WITH WHIP FOR PARTITION FURNITURE
	POWER / TELECOM WITH WHIP FOR PARTITION FURNITURE
	WALL MOUNTED JUNCTION BOX - SIZE AS REQUIRED BY CODE
	CEILING JUNCTION BOX - SIZE AS REQUIRED BY CODE
	FLOOR MOUNTED JUNCTION BOX - SIZE AS REQUIRED BY CODE
	PLUGMOLD
	POWER POLE
	CEILING EXHAUST FAN
EV EV	ELECTRIC VEHICLE CHARGING STATION, DUAL PORT & SINGLE PORT
$T	THERMAL OVERLOAD SWITCH
$M	MOTOR RATED SWITCH

RECEPTACLE SUBSCRIPT LEGEND (APPLIES TO ALL RECEPTACLES)

C	CONTROLLED/UNCONTROLLED [2]
LC	LOCKING COVER
TR	TAMPER-RESISTANT
U	USB (UNIVERSAL SERIAL BUS)
WP	WEATHERPROOF
WPU	WEATHERPROOF WHILE IN USE

FOOTNOTES:

[1] PROVIDE 44" MAX. TO TOP OF BOX AT AREAS WITH FORWARD ACCESSIBLE APPROACH KNEE CLEARANCE, OR PROVIDE 46" MAX. TO TOP OF BOX AT AREAS WITH PARALLEL ACCESSIBLE APPROACH (PER CBC 11B-308).

[2] FOR DUPLEX RECEPTACES: ONE HALF IS CONTROLLED, AND ONE HALF IS UNCONTROLLED. PLACE CONTROLLED HALF AT BOTTOM. FOR DOUBLE DUPLEX RECEPTACLES: ONE DUPLEX IS CONTROLLED, AND ONE DUPLEX IS UNCONTROLLED. PLACE CONTROLLED DUPLEX AT RIGHT.

SYMBOL	DESCRIPTION
	LIGHTING
	LED LUMINAIRE - T-BAR LAY-IN
	LED LUMINAIRE - RECESSED IN GYPBOARD
	LED LUMINAIRE - SURFACE
	LED LUMINAIRE - SUSPENDED
	LED LUMINAIRE - SURFACE OR SUSPENDED STRIP
	LED LUMINAIRE - RECESSED DOWNLIGHT
	LED LUMINAIRE - RECESSED WALLWASH
	LED LUMINAIRE - SURFACE
	LED LUMINAIRE - WALL
	LED LUMINAIRE - PENDANT
J	TRACK LIGHT - SUSPENDED OR SURFACE MOUNTED
	CONTINUOUS LINEAR LED TAPE OR LED COVE LIGHT
	HATCHED LUMINAIRE INDICATES AN EMERGENCY LUMINAIRE CONNECTED TO A EMERGENCY POWER DISTRIBUTION SYSTEM, OR INTEGRAL EMERGENCY BATTERY BACK-UP
	SINGLE FACE EXIT SIGN. SEE LIGHTING FIXTURE SCHEDULE FOR SPECIFICATION. DIRECTIONAL ARROW AS INDICATED ON PLANS. (CEILING OR WALL)
	DOUBLE FACE EXIT SIGN. SEE LIGHTING FIXTURE SCHEDULE FOR SPECIFICATION. DIRECTIONAL ARROW AS INDICATED ON PLANS. (CEILING OR WALL)
	COMBINATION EMERGENCY EXIT SIGN WITH DUAL HEAD LIGHTS WITH EMERGENCY BATTERY BACK-UP
	BATTERY POWERED EMERGENCY EGRESS LUMINAIRE - SURFACE MOUNTED
	SPOT/FLOOD LUMINAIRE - CEILING
	SPOT/FLOOD LUMINAIRE - ABOVE GROUND
	EXTERIOR POLE FIXTURE - SINGLE HEAD
	EXTERIOR POLE FIXTURE - TWIN HEAD
	EXTERIOR PATHWAY POST-TOP POLE FIXTURE
	BOLLARD FIXTURE
	STEP LUMINAIRE
	LIGHTING CONTROLS
$	SINGLE POLE TOGGLE SWITCH, 20A, 120-277V @ +46" TO TOP OF BOX, UNO [1]
$3	THREE WAY TOGGLE SWITCH, 20A, 120-277V @ +46" TO TOP OF BOX, UNO [1]
$a,b,c	SUBSCRIPTS "a b c" DESIGNATE THE QUANTITY OF SWITCHES AT EACH LOCATION (TYPICAL FOR ALL SWITCH TYPES) [1]
$K	SINGLE POLE KEYED BARREL SWITCH 20A, 120-277V @ +46" TO TOP OF BOX, UNO [1]
	WALL MOUNTED PUSH BUTTON @ +46" TO TOP OF BOX, UNO [1]
	WALL MOUNTED DIMMER SWITCH @ +46" TO TOP OF BOX, UNO [1]
OR	DIGITAL WALL CONTROL OVERRIDE SWITCH. RUN CABLING BACK TO LIGHTING CONTROL PANEL. MOUNTED @ +46" TO TOP OF BOX, UNO [1]
OS	WALL MOUNTED OCCUPANCY SENSOR, DUAL TECHNOLOGY, PASSIVE INFRA-RED OR ULTRASONIC, MOUNTED @ +46" TO TOP OF BOX, UNO [1]
OS	CEILING, OR PENDANT, MOUNTED OCCUPANCY SENSOR, DUAL TECHNOLOGY, PASSIVE INFRA-RED OR ULTRASONIC
OS	CORNER MOUNT OCCUPANCY SENSOR, DUAL TECHNOLOGY, PASSIVE INFRA-RED OR ULTRASONIC
PL	PHOTOCONTROL DAYLIGHT SENSOR
	TAGS AND LEADERS
X	KEY NOTE
G2 L1-11a	LIGHT FIXTURE TAG : FIXTURE TYPE PANEL NAME - CIRCUIT# / SWITCHLEG
X	FEEDER DESIGNATION TAG
X	KITCHEN EQUIPMENT DESIGNATION TAG
X Ex.1	DETAIL DESIGNATION: TOP LETTER INDICATES DETAIL NUMBER, BOTTOM LETTER / NUMBER INDICATES SHEET NUMBER
REF X	MECHANICAL OR PLUMBING EQUIPMENT TAG
	BRACKET
	LEADERS

SYMBOL	DESCRIPTION
	ONE LINE DIAGRAM
(N) PANEL "A" 100A	PANEL IDENTIFICATION
100A 3P	CIRCUIT BREAKER
100A 3P	FUSED SWITCH
GFCI	GROUND FAULT CIRCUIT INTERRUPTER
	GROUND
	UNDERGROUND TERMINATION SERVICE LUG
M	UTILITY METER WITH CURRENT TRANSFORMER COMPARTMENT METER SOCKET
M	CUSTOMER-OWNED MULTIFUNCTION METER WITH CURRENT TRANSFORMERS
	MOTOR
	TRANSFORMER WITH GROUND
	UFER GROUND
	BOND TO COLD WATER PIPE, GAS PIPE, BUILDING STEEL
	AUTOMATIC TRANSFER SWITCH
	NEUTRAL LINK
SPD	SURGE PROTECTIVE DEVICE
	CIRCUITS
	STUB
	CONTINUATION
	CONDUIT RISER - UP
	CONDUIT DROP - DOWN
	CONDUIT CONCEALED IN CEILING OR WALL.
	CONDUIT CONCEALED IN FLOOR OR UNDERGROUND
	EXISTING CONDUIT TO REMAIN.
	CONDUIT & CONDUCTORS FOR LOW VOLTAGE MOTION SENSORS
	EXISTING CONDUIT AND/OR CONDUCTORS TO BE REMOVED. UNDERGROUND CONDUIT MAY BE ABANDONED IN PLACE.
	HOMERUN TO PANELBOARD OR TERMINAL CABINET w/ CONDUCTORS AS NOTED
#	CIRCUIT CONDUTORS: LONG TICK INDICATES NEUTRAL CONDUCTOR; SHORT TICKS INDICATE PHASE CONDUCTORS; TICK MARK WITH A DOT ON THE END INDICATES EQUIPMENT GROUNDING CONDUCTOR. NUMBER BY TICKS INDICATE WIRE GAUGE OTHER THAN 12 AWG CU. NO TICKS INDICATE 2 #12 CU, 1 #12 CU GND, IN 1/2" CONDUIT. OTHERS AS NOTED ON PLAN. NOTE: PROVIDE A CODE SIZED EQUIPMENT GROUNDING CONDUCTOR IN ALL CONDUITS FOR THIS PROJECT, WHETHER SHOWN ON PLAN OR NOT.
	FLEXIBLE CONDUIT, 6'-0" LONG MAX. w/ #12 CU GROUND UNO.

IDENTIFICATION STAMP
DIV. OF THE STATE ARCHITECT
APP. 02-122544 INC:
REVIEWED FOR
SS ☐ FLS ☐ ACS ☐
DATE: 09/09/2024

JKAE
architecture + interiors + engineering

LP CONSULTING ENGINEERS
MEP & FS / Sustainability / CxA
1209 Pleasant Grove Blvd.
Roseville, CA. 95678
p 916-771-0778
www.lpengineers.com
Job #: 23-2066

SEAL

REGISTERED PROFESSIONAL ENGINEER
RAMI S. ZEIDAN
No. E 16762
EXP. 9-30-24
ELECTRICAL
STATE OF CALIFORNIA

DSA SUBMITTAL

DSA #: 02-122544

Project
SOLANO COMMUNITY COLLEGE
AUTO TECH FACILITY

Drawing Title
ELECTRICAL LEGEND

Drawn By: RSP
Checked By: RZ

NO.	DATE	ISSUE

Project No.: 23-265
©Date: 06-05-2024

DRAWING NO.
E0.0.2

Autodesk Docs://23-265 Autotech Exhaust Replacement/23-2066 Solano Autotech_MEP_r23.rvt
9/3/2024 9:06:07 AM

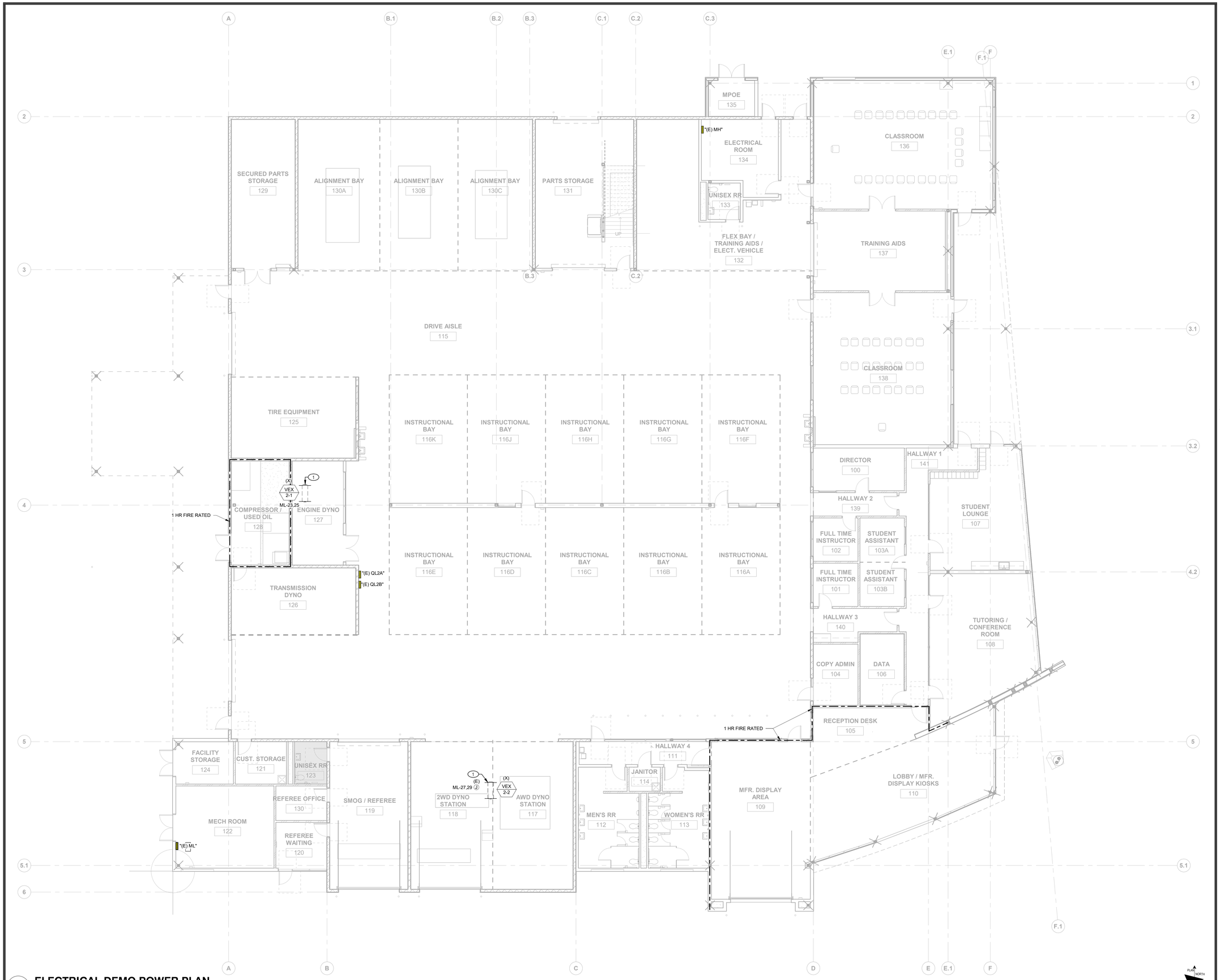

1 **ELECTRICAL DEMO POWER PLAN**
SCALE: 1/8" = 1'-0"

IDENTIFICATION STAMP
DIV. OF THE STATE ARCHITECT
APP. 02-122544 INC:
REVIEWED FOR
SS ☐ FLS ☐ ACS ☐
DATE: 09/09/2024

JKAE
architecture + interiors + engineering

KEY NOTES

1 DEMOLISH 208V CONNECTION TO EXISTING VEHICLE EXHAUST MOTORIZED HOSE REEL. DEMOLISH WIRE BACK TO SOURCE. KEEP EXISTING CONDUIT AND ASSOCIATED J-BOX FOR FUTURE USE.

GENERAL NOTES

A. FIELD VERIFY EXISTING CONDITIONS PRIOR TO PERFORMING WORK. NOTIFY ARCHITECT AND ENGINEER OF ANY CONFLICTS OR DISCREPANCIES

LP CONSULTING ENGINEERS
MEP & FS / Sustainability / CxA
1209 Pleasant Grove Blvd.
Roseville, CA 95678
p 916-771-0778
www.lpengineers.com
Job #: 23-2066

SEAL

REGISTERED PROFESSIONAL ENGINEER RAMI S. ZEIDAN No. E 16762 EXP. 9-30-24 ELECTRICAL STATE OF CALIFORNIA

DSA SUBMITTAL

DSA #: 02-122544

Project: SOLANO COMMUNITY COLLEGE
AUTO TECH FACILITY

Drawing Title: **ELECTRICAL DEMO POWER PLAN**

Drawn By: RSP
Checked By: RZ

NO.	DATE	ISSUE

Project No.: 23-265
Date: 06-05-2024

DRAWING NO.: **E2.0.1**

Autodesk Docs://23-265 Auttech Exhaust Replacement/23-265 Solano Auttech_MEP_23.rvt
9/3/2024 9:06:09 AM

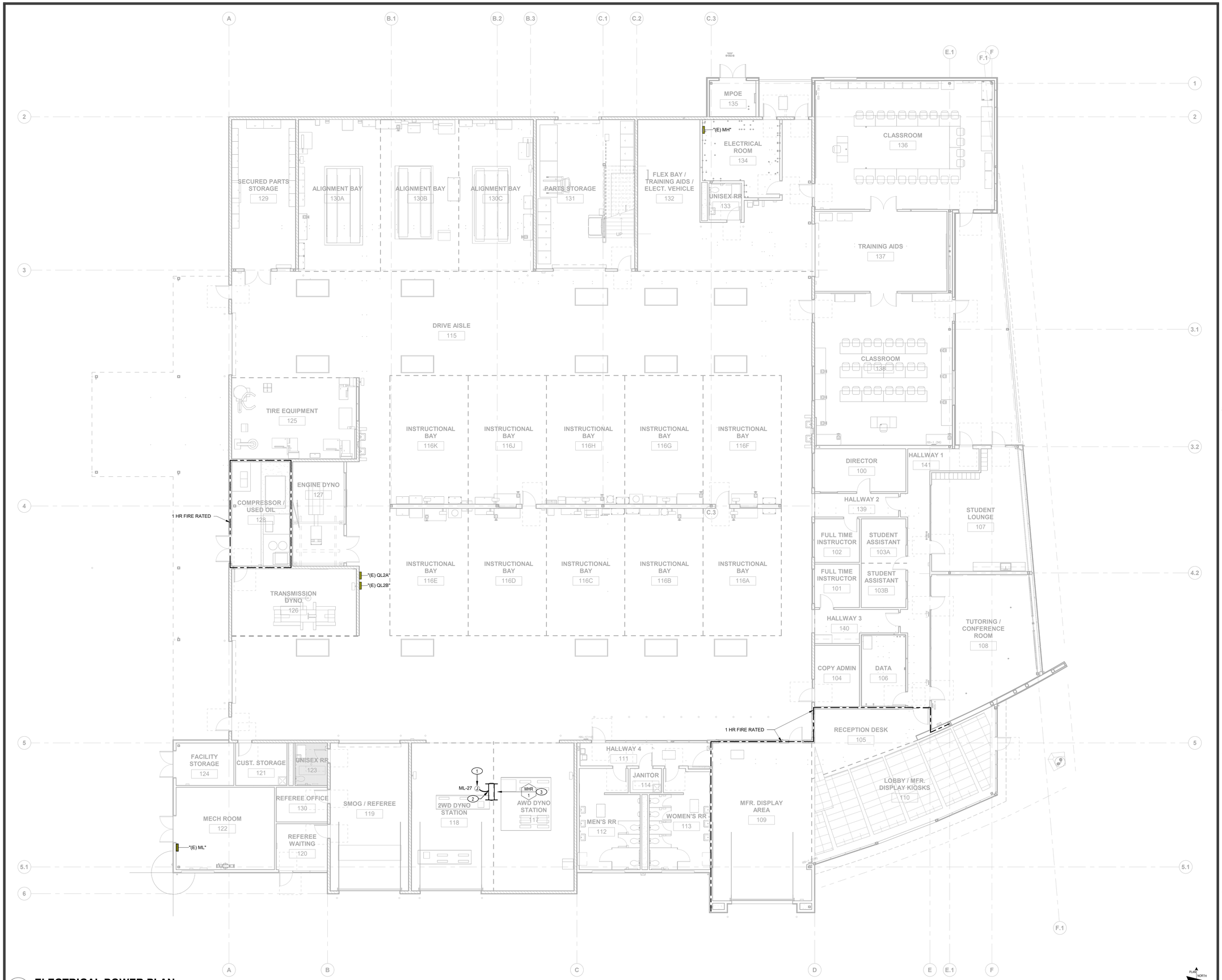

1 **ELECTRICAL POWER PLAN**
SCALE: 1/8" = 1'-0"

IDENTIFICATION STAMP
DIV. OF THE STATE ARCHITECT
APP: 02-122544 INC:
REVIEWED FOR
SS ☐ FLS ☐ ACS ☐
DATE: 09/09/2024

JKAE
architecture + interiors + engineering

KEY NOTES

1 UTILIZE EXISTING CONDUIT MADE AVAILABLE BY DEMOLITION. PULL NEW WIRE.
2 PROVIDE 120V LIQUIDTIGHT CONNECTION TO NEW VEHICLE EXHAUST MOTORIZED HOSE REEL. CONNECT COMPLETE PER MANUFACTURERS RECOMMENDATIONS.
3 COORDINATE WITH OWNER FOR LOCATION OF REEL MOTOR PB STATION.

GENERAL NOTES

A. FIELD VERIFY EXISTING CONDITIONS PRIOR TO PERFORMING WORK. NOTIFY ARCHITECT AND ENGINEER OF ANY CONFLICTS OR DISCREPANCIES

LP CONSULTING ENGINEERS
MEP & FS / Sustainability / CxA
1209 Pleasant Grove Blvd.
Roseville, CA 95678
p 916-771-0778
www.lpengineers.com
Job #: 23-2066

SEAL

REGISTERED PROFESSIONAL ENGINEER
RAMI S. ZEID
No. E 16762
EXP. 9-30-24
ELECTRICAL
STATE OF CALIFORNIA

DSA SUBMITTAL

DSA #: 02-122544

Project
SOLANO COMMUNITY COLLEGE
AUTO TECH FACILITY

Drawing Title
ELECTRICAL POWER PLAN

Drawn By: RSP
Checked By: RZ

NO.	DATE	ISSUE

Project No.: 23-265
Date: 06-05-2024

DRAWING NO.
E2.1.1

Autodesk Docs://23-265 Autotech Exhaust Replacement/23-2066 Solano Autotech_MEP_23.rvt
9/3/2024 9:06:11 AM

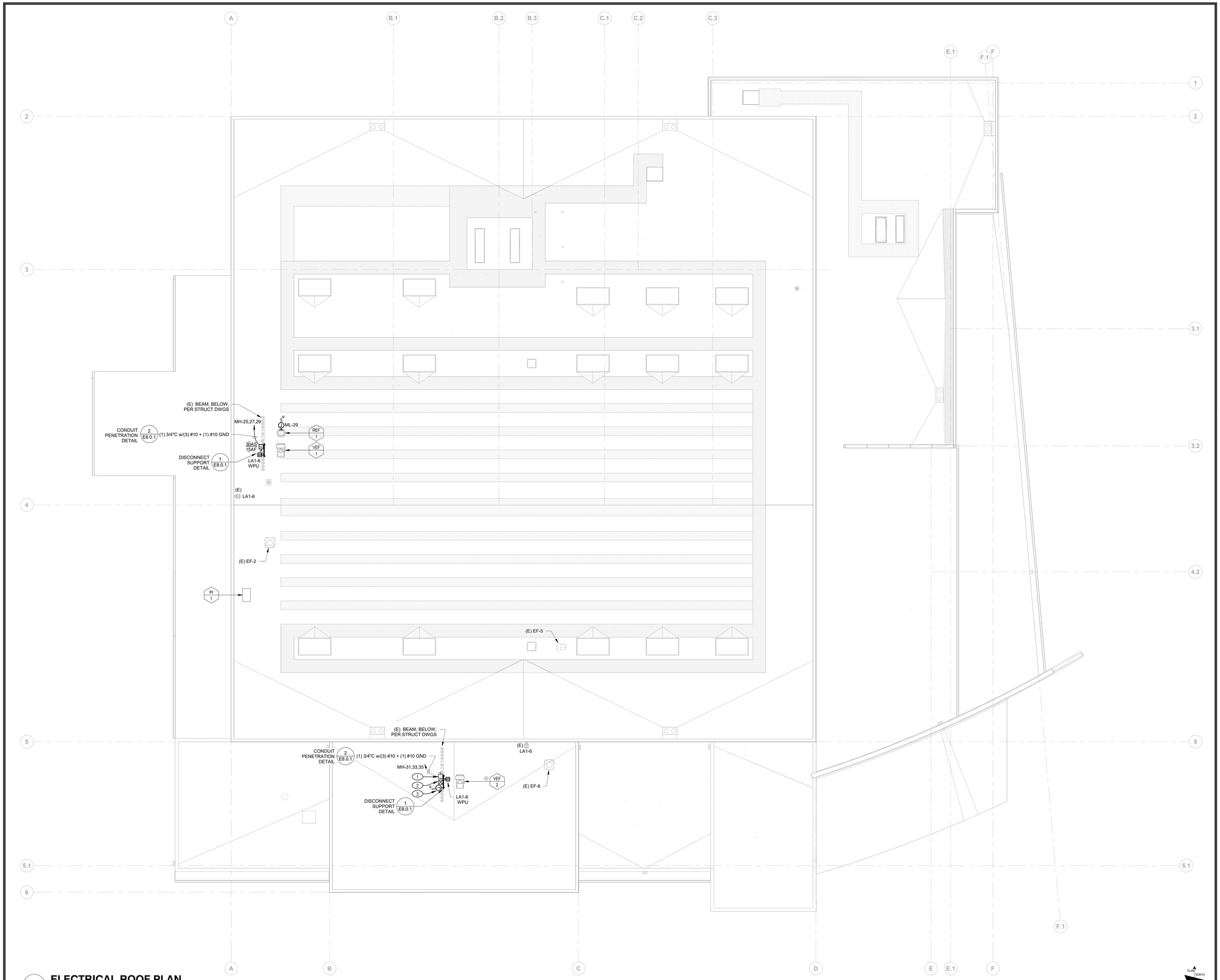

1 ELECTRICAL ROOF PLAN

SCALE: 1/8" = 1'-0"

IDENTIFICATION STAMP
DIV. OF THE STATE ARCHITECT
APP: 02-122544 INC:
REVIEWED FOR
SS ☒ FLS ☐ ACS ☐
DATE: 09/09/2024

JKAE
architecture + interiors + engineering

KEY NOTES

1 PROVIDE 480V 3PH CONNECTION TO MANUFACTURER PROVIDED NON FUSED DISCONNECT SWITCH. CONNECT COMPLETE PER MANUFACTURER RECOMMENDATIONS.

2 PROVIDE 480V CONNECTION TO MANUFACTURER PROVIDED STARTER VIA NON FUSED DISCONNECT SWITCH. CONNECT COMPLETE PER MANUFACTURER RECOMMENDATIONS.

3 PROVIDE 120V SWITCHED CONNECTION FROM WCB4 REEL ENCLOSURE TO MANUFACTURE PROVIDED STARTER COIL. PROVIDE FINAL CONNECTION TO VEF-2. COMPLETE PER MANUFACTURER RECOMMENDATIONS.

GENERAL NOTES

A. FIELD VERIFY EXISTING CONDITIONS PRIOR TO PERFORMING WORK. NOTIFY ARCHITECT AND ENGINEER OF ANY CONFLICTS OR DISCREPANCIES

LP CONSULTING ENGINEERS
MEP & FS / Sustainability / CxA
1209 Pleasant Grove Blvd.
Roseville, CA. 95678
p 916-771-0778
www.lpengineers.com
Job #: 23-2066

SEAL

REGISTERED PROFESSIONAL ENGINEER
RAMI S. ZEIDAN
No. E 16702
EXP. 9-30-24
ELECTRICAL
STATE OF CALIFORNIA

DSA SUBMITTAL

DSA #: 02-122544

Project
SOLANO COMMUNITY COLLEGE
AUTO TECH FACILITY

Drawing Title
ELECTRICAL ROOF PLAN

Drawn By: RSP
Checked By: RZ

NO.	DATE	ISSUE

Project No.: 23-265
Date: 06-05-2024

DRAWING NO.
E5.0.1

Autodesk Docs://23-265 Autotech Exhaust Replacement/23-2066 Solano Autotech_MEP_r23.rvt
9/3/2024 9:05:14 AM

PANEL "MH"

277/480 Volt, 3 Phase, 4 Wire
400 Amp BUS CU.
400 Amp MCB

KAIC Rating
SURFACE Mounted
NEMA 1 Type

			PHASE SUMMARY (WATTS)								
CKT.	BKR	DESCRIPTION	A	B	C		A	B	C	DESCRIPTION	BKR	CKT.
1	80/3	(E) IDD-1	7,980				5,852			(E) AC-1	60/3	2
3	-	-		7,980				5,852			-	4
5	-	-			7,980				5,852		-	6
7	70/3	(E) TX-M	10,287				2,394			(E) VFD-2/SHWP-2	30/3	8
9	-	-		10,287				2,394			-	10
11	-	-			10,287				2,394		-	12
13	30/3	(E) VFD-1/SHWP-1	2,394				5,817			COMPRESSOR	30/3	14
15	-	-		2,394				5,817			-	16
17	-	-			2,394				5,817		-	18
19	20/3	(E) ENGIN DYNO BOOST PUMP	831							SPARE	30/3	20
21	-			831							-	22
23	-	-			831						-	24
25	**15/3**	**VEF-1**	1,083							SPACE	PFB	26
27	-	-		1,083						SPACE	PFB	28
29	-	-			1,083					SPACE	PFB	30
31	**15/3**	**VEF-2**	1,798							SPACE	PFB	32
33	-	-		1,798						SPACE	PFB	34
35	-	-			1,798					SPACE	PFB	36
37	PFB	SPACE								SPACE	PFB	38
39	PFB	SPACE								SPACE	PFB	40
41	PFB	SPACE								SPACE	PFB	42

PHASE TOTALS		
A	B	C
38,436	38,436	38,436

PANEL AND CIRCUIT BREAKER NOTES:

[1] (1)

[2] (1)

DEMAND LOADS		
LIGHTING / CONTINUOUS LOAD x 125%		Watts
RECEPTACLES / OTHER x 100%	115,308	Watts
LARGEST MOTOR x 25%	1,995	Watts
TOTAL DEMAND LOADS	117,303	Watts
TOTAL DEMAND AMPS	141	AMPS

PANEL "ML"

120/208 Volt, 3 Phase, 4 Wire
125 Amp BUS CU.
125 Amp MCB
Amp MLO

10 KAIC Rating
SURFACE Mounted
NEMA 1 Type

			PHASE SUMMARY (WATTS)								
CKT.	BKR	DESCRIPTION	A	B	C		A	B	C	DESCRIPTION	BKR	CKT.
1	20/1	(E) VEX 1-14								(E) FC-1 /CU-1	30/2	2
3	20/1	(E) VAV'S										4
5	20/2	(E) EF-3								(E) RECEPTACLE	20/1	6
7	-									(E) CP-2	20/1	8
9	20/1	(E) EF-4								(E) TRANSFER FAN	20/1	10
11	20/1	(E) EF-5								(E) TRANSFER FAN	20/1	12
13										(E) B1	20/1	14
15	20/2	(E) EF-6								(E) B-2	20/1	16
17	-	-								(E) GWH-1	20/1	18
19	20/1	(E) EF-1								(E) PWH-1	20/1	20
21	20/1	(E) EF-2								(E) PWH-2	20/1	22
23	20/2	**SPARE**								(E) IRRIGATION CONTROL	20/1	24
25										(E) EF-8	20/1	26
27	**20/1**	**MHR**		180						WHEELCHAIR LIFT	20/2	28
29	**20/1**	**REF-1**			165							30
31	PFB	SPACE								(E) CIRC PUMP	20/1	32
33	20/3	(E) CU-2								(E) ELKAY RECEPT	20/1	34
35										(E) ROOF RECEPT	20/1	36
37	20/2	(E) FC-2								(E) FA BELL/DELUGE CONTROL	20/1	38
39	-									(E) HVAC CONTROL PANEL RELAY	20/1	40
41	20/1	(E) BPS-FA								(E) LEVEL SENSOR	20/1	42

PHASE TOTALS		
A	B	C
	180	165

PANEL AND CIRCUIT BREAKER NOTES:

[1] (2)

[2] (3)

DEMAND LOADS		
LIGHTING / CONTINUOUS LOAD x 125%		Watts
RECEPTACLES / OTHER x 100%	345	Watts
LARGEST MOTOR x 25%	45	Watts
TOTAL DEMAND LOADS	390	Watts
TOTAL DEMAND AMPS	1	AMPS

IDENTIFICATION STAMP
DIV. OF THE STATE ARCHITECT
APP. 02-122544 INC:
REVIEWED FOR
SS ☒ FLS ☒ ACS ☒
DATE: 09/09/2024

JKAE
architecture + interiors + engineering

KEY NOTES

1 PROVIDE NEW 3 POLE CIRCUIT BREAKER AND INSTALL IN AVAILABLE SPACE. MATCH EXISTING BREAKERS MAKE, MODEL AND AIC RATING

2 DEMOLISH EXISTING 2 POLE BREAKER AND LABEL AS 'SPARE'

3 DEMOLISH EXISTING 2 POLE BREAKER AND PROVIDE (2) 20A SINGLE POLE BREAKERS IN AVAILABLE SPACE. MATCH EXISTING BREAKERS MAKE, MODEL AND AIC RATING

MEP & FS / Sustainability / CxA

1209 Pleasant Grove Blvd.
Roseville, CA 95678
p 916-771-0778

www.lpengineers.com
Job #: 23-2066

SEAL

REGISTERED PROFESSIONAL ENGINEER
RAMI S. ZEID
No. E 16702
EXP. 9-30-24
ELECTRICAL
STATE OF CALIFORNIA

DSA SUBMITTAL

DSA #: 02-122544

Project
SOLANO COMMUNITY COLLEGE
AUTO TECH FACILITY

Drawing Title
ELECTRICAL PANEL SCHEDULES

Drawn By
RSP

Checked By
RZ

NO.	DATE	ISSUE

Project No.
23-265

Date
06-05-2024

DRAWING NO.
E7.0.1

9/3/2024 9:06:16 AM Autodesk Docs://23-265 Autotech Exhaust Replacement/23-2066 Solano Autotech_MEP_23.rvt

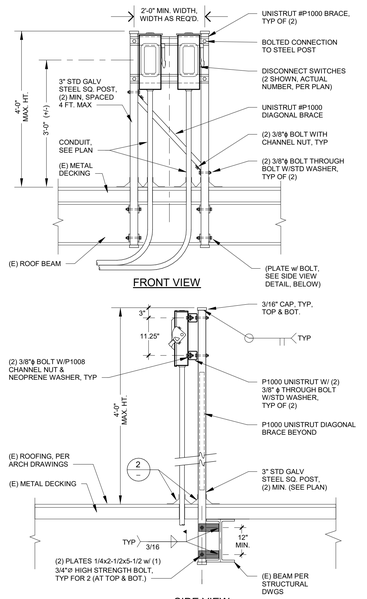

NOTE: DISCONNECT/SUPPORT MUST BE RELOCATED PER ROOF PLAN IN ORDER TO BE SUPPORTED BY A BEAM

DISCONNECT(S) MOUNTED ON ROOF, ON UNISTRUT & STEEL POST DETAIL	NTS	1

NOTES:

1. THIS DETAIL APPLIES FOR METAL POSTS OR CONDUITS, 8" DIA. OR SMALLER

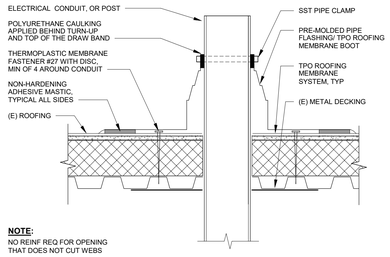

NOTE:
NO REINF REQ FOR OPENING THAT DOES NOT CUT WEBS

ROOF CONDUIT PENETRATION DETAIL	NTS	2

IDENTIFICATION STAMP
DIV. OF THE STATE ARCHITECT
APP. 02-122544 INC:
REVIEWED FOR
SS ☒ FLS ☒ ACS ☒
DATE: 09/09/2024

JKAE
architecture + interiors + engineering

LP CONSULTING ENGINEERS
MEP & FS / Sustainability / CxA
1209 Pleasant Grove Blvd.
Roseville, CA 95678
p 916-771-0778
www.lpengineers.com
Job #: 23-2066

SEAL

REGISTERED PROFESSIONAL ENGINEER
RAMI S. ZEIDAN
No. E 16762
EXP. 9-30-24
ELECTRICAL
STATE OF CALIFORNIA

DSA SUBMITTAL

DSA #: 02-122544

Project
SOLANO COMMUNITY COLLEGE
AUTO TECH FACILITY

Drawing Title
ELECTRICAL DETAILS

Drawn By: RSP
Checked By: RZ

NO.	DATE	ISSUE

Project No.: 23-265
Date: 06-05-2024

DRAWING NO.
E8.0.1

Autodesk Docs://23-265 Autotech Exhaust Replacement/23-2066 Solano Autotech_MEP_r23.rvt
9/3/2024 9:06:17 AM

ELECTRICAL SPECIFICATIONS

PART 1 - GENERAL

THE SPECIFICATION SECTIONS LISTED BELOW DO NOT ALL NECESSARILY APPLY TO THE SCOPE OF THIS PROJECT.

1.01 SCOPE OF WORK

A. FURNISH ALL NECESSARY LABOR, MATERIALS, EQUIPMENT, AND INCIDENTALS REQUIRED TO INSTALL A COMPLETE AND OPERATIONAL ELECTRICAL SYSTEM ACCORDING TO THE INTENT OF THIS SPECIFICATION WHETHER ITEMIZED OR NOT.

B. EXAMINE THE MECHANICAL PLANS AND SPECIFICATIONS FOR MECHANICAL EQUIPMENT AND PROVIDE ALL STARTERS, CIRCUIT BREAKERS, SWITCHES, PUSHBUTTONS, AND APPURTENANCES, WHICH ARE NOT SPECIFIED TO BE WITH THE MECHANICAL EQUIPMENT. ERECT ALL ELECTRICAL EQUIPMENT NOT DEFINITELY STATED TO BE ERECTED BY OTHERS, FURNISH AND INSTALL CONDUIT, WIRE, AND CABLE AND MAKE CONNECTIONS REQUIRED TO PLACE ALL EQUIPMENT IN COMPLETE OPERATION.

C. THE GENERAL EXTENT OF THE ELECTRICAL WORK INCLUDES, AMONG OTHERS, THE FURNISHING AND INSTALLING OF THE FOLLOWING ITEMS:

1. PRIMARY AND SECONDARY SERVICE FACILITIES INCLUDING TRANSFORMER PADS, PRIMARY CONDUIT AND TRENCHING, SECONDARY CONDUIT, TRENCHING AND CONDUCTORS, AND MAIN SWITCHBOARD INCLUDING FACILITIES FOR METERING, DISTRIBUTION PANELS, AND PANELBOARDS.
2. LIGHTING AND POWER INSTALLATION, INCLUDING FIXTURES, RECEPTACLE OUTLETS, SWITCHING, AND CIRCUITS AS INDICATED ON THE DRAWINGS.
3. ALL SUPPORTS, BASES, ANCHORS, SLEEVES, HANGERS AND THE LIKE, ALL ELECTRICAL WORK SHOWN AND/OR SPECIFIED, NOT PARTICULARLY MENTIONED ABOVE.
4. COMPLETE GROUNDING AND BONDING SYSTEMS.
5. TELEPHONE (MPOE) SERVICE ENTRANCE CONDUIT, BACKBOARDS, AND INTERCONNECTING CONDUIT. SEE TECHNOLOGY DRAWINGS AND COORDINATE REQUIREMENTS.
6. CABLE TELEVISION SERVICE ENTRANCE CONDUIT, BACKBOARD OR CABINET, AND INTERCONNECTING CONDUIT. SEE TECHNOLOGY DRAWINGS AND COORDINATE REQUIREMENTS.
7. THE CONTRACTOR WILL COORDINATE WITH THE LOCAL UTILITY COMPANIES FOR VERIFICATION OF THEIR REQUIREMENTS PRIOR TO BID CLOSURE AND PRIOR TO INSTALLATION. IT WILL BE THE CONTRACTOR'S RESPONSIBILITY TO VERIFY VOLTAGE, PHASE, CONDUIT SIZE, TYPE AND QUANTITY, WIRE SIZE; TYPE AND QUANTITY, AND THE LOCATION OF ALL EQUIPMENT REQUIRED FOR THIS PROJECT.
8. STANDBY EMERGENCY POWER GENERATOR, CONCRETE PAD, AND AUTO-TRANSFER SWITCH.
9. POWER CONNECTION TO HVAC AND PLUMBING EQUIPMENT.

1.02 RELATED WORK INCLUDED IN OTHER DIVISIONS

A. FINISH PAINTING EXCEPT FACTORY APPLIED FINISHES AND REPAIR OF FACTORY FINISHES SHALL BE PROVIDED IN ACCORDANCE WITH APPROPRIATE SECTIONS OF THIS SPECIFICATION. COORDINATE "PAINTING" REQUIREMENTS OF THIS DIVISION WITH OTHER TRADES AS REQUIRED TO ASSURE TIMELY AND SATISFACTORY COMPLETION OF REQUIRED WORK. IN FINISHED AREAS, ALL EXPOSED RACEWAY, BOXES, GALVANIZED STEEL BOX COVERS (WHERE ALLOWED), AND OTHER ELECTRICAL "STRUCTURE" SHALL BE FINISHED TO MATCH ADJACENT STRUCTURES. VERIFY THAT ALL RACEWAY OPENINGS ARE CLOSED AND BOX COVERS ARE IN PLACE PRIOR TO FINISHING WORK DONE BY OTHERS.

B. EXAMINE THE DRAWINGS AND SPECIFICATIONS FOR MECHANICAL EQUIPMENT AND PROVIDE ELECTRICAL INSTALLATION FOR HEATING, VENTILATION AND AIR CONDITIONING EQUIPMENT, MOTORS, PUMPS AND ASSOCIATED MOTOR STARTERS AND CONTROLS AS DESCRIBED IN 1.15 EQUIPMENT IDENTIFICATION.

C. EXAMINE THE DRAWINGS AND SPECIFICATIONS OF OTHER TRADES FOR ELECTRICAL EQUIPMENT WHICH MAY NOT BE SHOWN ON THE PLANS TO INCLUDE AND PROVIDE ELECTRICAL INSTALLATIONS AS DESCRIBED IN OTHER TRADES WORK, I.E. MODULAR OFFICE SYSTEM FURNITURE, INFORMATION TECHNOLOGY (I.T.) SYSTEM EQUIPMENT, AUDIO/VIDEO SYSTEMS EQUIPMENT, ETC.

D. EXAMINE THE ARCHITECTURAL DRAWINGS AND SPECIFICATIONS FOR ELECTRICAL APPLIANCES AND EQUIPMENT WHICH MAY NOT BE SHOWN ON THE PLANS TO INCLUDE AND PROVIDE ELECTRICAL INSTALLATIONS AS DESCRIBED IN THE ARCHITECTURAL DIVISION OF WORK.

E. EXAMINE THE ARCHITECTURAL DRAWINGS AND PROVIDE ALL CONSTRUCTION NECESSARY TO MAINTAIN THE INTEGRITY OF THE FIRE RATED BARRIERS.

F. EXAMINE THE ARCHITECTURAL DRAWINGS AND COORDINATE WITH THE ARCHITECT TO PROVIDE ACCESS DOORS, WHETHER SHOWN ON DRAWINGS OR NOT, WHERE FLOORS, WALLS, OR CEILING MUST BE PENETRATED FOR ACCESS TO ELECTRICAL EQUIPMENT, OUTLET BOXES, DEVICES, ETC., AND AS SPECIFIED IN THIS SPECIFICATION.

G. PROVIDE AND INSTALL, AS PART OF THE WORK DESCRIBED IN THIS DIVISION, ALL POWER AND CONTROL WIRING FED FROM A SOURCE OF 30 VOLTS OR MORE (I.E. ALL WIRING EXCEPT TEMPERATURE CONTROL WIRING) FOR MECHANICAL EQUIPMENT DESCRIBED IN 1.15 EQUIPMENT IDENTIFICATION.

1.03 APPLICATION OF OTHER DIVISIONS

A. WHERE CARPENTRY, MASONRY, CONCRETE WORK, PAINTING, ETC., IS REQUIRED IN THE INSTALLATION OF EQUIPMENT SPECIFIED UNDER THIS DIVISION, THE WORK SHALL BE DONE IN ACCORDANCE WITH THE APPLICABLE DIVISION OF THESE SPECIFICATIONS. THIS WORK COULD INCLUDE FOR EXAMPLE: WORK ASSOCIATED WITH PANELBOARD INSTALLATION, EQUIPMENT PADS OR BASES, SUPPORT STRUCTURES, ETC.

1.04 DRAWINGS AND SPECIFICATIONS

A. THE INFORMATION PRESENTED IN THESE SPECIFICATIONS AND ON THE DRAWINGS IS INTENDED TO DESCRIBE THE UTILITARIAN AND PHYSICAL ASPECTS OF THE SYSTEMS SHOWN AS WELL AS THE QUALITY OF THE ENTIRE INSTALLATION. ALL INFORMATION IS AS COMPLETE AND THOROUGH AS POSSIBLE, BUT EVERY CONDITION OR SITUATION CANNOT BE ANTICIPATED. EXACT LOCATIONS, DIMENSIONS, ELEVATIONS, ETC. MUST BE DETERMINED "ON THE JOB" WITH CAREFUL ATTENTION TO THE "INTENT" OF THE DRAWINGS AND SPECIFICATIONS.

B. THE ABOVE PARAGRAPH SHALL NOT BE CONSTRUED AS TO ALLOW SIGNIFICANT DEVIATION FROM EITHER THE DRAWINGS OR SPECIFICATIONS WITHOUT PRIOR APPROVAL OF THE ARCHITECT, BUT MINOR CHANGES IN CONDUIT ROUTING OR EQUIPMENT LOCATIONS MAY BE REQUIRED OR DESIRED DUE TO SPECIFIC CONDITIONS ENCOUNTERED. THIS WORK SHALL BE ACCOMPLISHED IN ACCORDANCE WITH THESE SPECIFICATIONS AND NO "EXTRA CHARGES" ARE TO BE CREATED FOR ANY UNANTICIPATED LABOR OR MATERIAL.

C. ANY ERROR OR OMISSIONS OF DETAIL IN EITHER THE DRAWINGS OR THE SPECIFICATIONS SHALL NOT RELIEVE THE CONTRACTOR FROM CORRECTLY INSTALLING ALL MATERIALS NECESSARY FOR COMPLETE AND OPERATING ELECTRICAL SYSTEMS.

D. CONTRACTOR SHALL INSPECT THE SITE AND VERIFY ALL MEASUREMENTS AND CONDITIONS. NO EXTRA COMPENSATION WILL BE ALLOWED BECAUSE OF DIFFERENCES BETWEEN WORK SHOWN ON THE DRAWINGS AND MEASUREMENTS AT THE SITE.

E. THE DRAWINGS ARE DIAGRAMMATIC IN NATURE, BUT THE LOCATIONS OF DEVICES, EQUIPMENT, OUTLETS, AND LIGHTING FIXTURES ARE SHOWN APPROXIMATELY WHERE INSTALLATIONS ARE INTENDED. ARCHITECTURAL, STRUCTURAL, MECHANICAL, AND OTHER DRAWINGS SHALL BE EXAMINED, NOTING ALL CONDITIONS THAT MAY AFFECT THIS WORK. REPORT CONFLICTING CONDITIONS TO THE ARCHITECT/ENGINEER FOR ADJUSTMENT BEFORE PROCEEDING WITH THE WORK. SHOULD THE CONTRACTOR PROCEED WITH WORK WITHOUT REPORTING THE MATTER, HE DOES SO ON HIS OWN RESPONSIBILITY AND SHALL ALTER WORK IF DIRECTED BY THE ARCHITECT/ENGINEER AT HIS OWN EXPENSE.

F. EXAMINE THE ARCHITECTURAL, STRUCTURAL, MECHANICAL, PLUMBING AND MANUFACTURER'S DRAWINGS FOR VARIOUS EQUIPMENT IN ORDER TO DETERMINE EXACT ROUTING AND FINAL TERMINATIONS FOR ALL CONDUITS AND CABLES. CONDUITS SHALL BE STUBBED UP AS NEAR AS POSSIBLE TO EQUIPMENT ENCLOSURE.

G. ALL EQUIPMENT SHALL BE LOCATED AND INSTALLED SO THAT IT WILL BE READILY ACCESSIBLE FOR OPERATION AND MAINTENANCE. THE OWNER RESERVES THE RIGHT TO REQUIRE MINOR CHANGES IN LOCATION OF OUTLETS OR EQUIPMENT, PRIOR TO ROUGH IN WITHOUT INCURRING ANY ADDITIONAL COST OR CHANGES.

H. IF SIGNIFICANT DEPARTURES FROM THE DRAWINGS OR SPECIFICATIONS ARE CONSIDERED NECESSARY BY THE CONTRACTOR, DETAILS OF THE CHANGES AND THE REASONS THEREFORE SHALL BE SUBMITTED TO THE ARCHITECT/ ENGINEER WITHIN THIRTY DAYS AFTER AWARD OF CONTRACT. PRIOR WRITTEN ACCEPTANCE OF THE ARCHITECT IS REQUIRED FOR THESE DEPARTURES.

I. CLARIFICATION OF PLANS AND SPECIFICATIONS FOR THE PURPOSE OF FACILITATING CONSTRUCTION, BUT NOT INVOLVING ADDITIONAL LABOR AND MATERIALS, MAY BE PREPARED DURING CONSTRUCTION BY THE ARCHITECT/ ENGINEER. SAID REVISED PLANS AND SPECIFICATIONS SHALL BECOME A PART OF THE CONTRACT. THE CONTRACTOR SHALL CONFORM TO THE REVISED PLANS AND SPECIFICATIONS AT NO ADDITIONAL COST TO THE OWNER.

J. WHERE EXISTING UNDERGROUND OR OTHERWISE CONCEALED FACILITIES ARE INDICATED ON THE DRAWINGS, THESE ARE LOCATED AS WELL AS CAN BE DETERMINED FROM AVAILABLE INFORMATION. THE CONTRACTOR IS REQUIRED TO VERIFY ACTUAL LOCATIONS AS NECESSARY FOR THIS CONSTRUCTION.

1.05 CODES AND STANDARDS

A. ALL WORK SHALL CONFORM TO THE FOLLOWING CODES:

1. NFPA 70 - NATIONAL ELECTRICAL CODE 2020 EDITION WITH 2022 CALIFORNIA ELECTRICAL CODE (CEC) AMENDMENTS.
2. TITLE 24 2022 - STATE OF CALIFORNIA ADMINISTRATIVE CODE
3. 2022 CALIFORNIA BUILDING CODE
4. CITY OR COUNTY ELECTRICAL CODE AS APPLICABLE
5. APPLICABLE REGULATIONS OF LOCAL UTILITY COMPANIES
6. ELECTRIC UTILITY SERVICE EQUIPMENT REQUIREMENTS COMMITTEE (EUSERC) STANDARDS
7. ANY ADDITIONAL CODES EFFECTIVE AT THE JOB SITE

B. FURNISH WITHOUT EXTRA CHARGE ANY ADDITIONAL MATERIAL AND LABOR WHICH MAY BE REQUIRED FOR COMPLIANCE WITH THESE LAWS, RULES, AND REGULATIONS, EVEN THOUGH THE WORK IS NOT MENTIONED IN THESE PARTICULAR SPECIFICATIONS.

C. APPLY AND PAY FOR ALL PERMITS REQUIRED BY ANY OF THE LEGALLY CONSTITUTED PUBLIC AUTHORITIES FOR THE INSTALLATION OR CONSTRUCTION OF THE WORK INCLUDED UNDER THIS SPECIFICATION.

D. ARRANGE AND PAY FOR ANY INSPECTIONS OR EXAMINATIONS SO REQUIRED AND DELIVER CERTIFICATES OF ALL SUCH INSPECTIONS TO THE OWNER. WHEN THESE SPECIFICATIONS CALL FOR MATERIALS OR CONSTRUCTION OF A BETTER QUALITY OR LARGER SIZES THAN REQUIRED BY THE ABOVE MENTIONED RULES AND REGULATIONS, THE PROVISIONS OF THE SPECIFICATIONS SHALL TAKE PRECEDENCE.

1.06 EXAMINATION OF THE SITE

A. THE CONTRACTOR IS REQUIRED TO VISIT THE SITE OF CONSTRUCTION PRIOR TO BID TO DETERMINE EXISTING CONDITIONS AND THEIR EFFECT UPON THE WORK HE WILL BE REQUIRED TO PERFORM. NO ADDITIONAL COMPENSATION WILL BE ALLOWED FOR ANY EXTRA EXPENSES INCURRED BY FAILURE TO DETECT AND EVALUATE ALL EXISTING CONDITIONS THAT WILL AFFECT HIS WORK TO BE INCLUDED IN THE BID TO ACCOMPLISH THIS CONTRACT DOCUMENT'S GOAL.

1.07 COORDINATION WITH OTHER TRADES

A. EXAMINE THE ELECTRICAL DRAWINGS AND REFER TO THE DRAWINGS AND SPECIFICATIONS DESCRIBING OTHER WORK TO BE ACCOMPLISHED. VERIFY AND COORDINATE PRIOR TO BID. CONTINUE TO COORDINATE WORK PLANNING AND ALL WORK IN THE FIELD TO AVOID CONFLICTS, ERRORS, AND/OR DELAYS. NO COMPENSATION WILL BE ALLOWED FOR EXTRA WORK NECESSITATED BY LACK OF COORDINATION.

1.08 STRUCTURAL REQUIREMENTS

A. SECURE ALL ANCHORS FOR ELECTRICAL EQUIPMENT IN A MANNER, WHICH WILL NOT DECREASE THE STRUCTURAL VALUE OF ANY STRUCTURE TO AN UNSAFE LEVEL. INSTALL ALL EQUIPMENT, FIXTURES, ETC. TO RESIST SEISMIC MOVEMENTS. INFORM THE ARCHITECT IN ADVANCE AND PROVIDE DRAWINGS OF ANY PROPOSED MODIFICATIONS TO THE STRUCTURE THAT INVOLVES CUTTING OR PATCHING OF CONCRETE, MASONRY, STEEL, OR WOOD IN THIS PROJECT.

1.09 MANUFACTURER'S INSTRUCTIONS

A. FOLLOW THE MANUFACTURER'S INSTRUCTIONS WHEN SPECIFIC INSTALLATION OR CONNECTION DETAILS ARE NOT INDICATED OR SPECIFIED ON THE CONTRACT DOCUMENTS.

B. NOTIFY THE ARCHITECT/ENGINEER OF CONFLICTS BETWEEN THE MANUFACTURER'S INSTRUCTIONS AND INSTALLATION OR CONNECTION DETAILS PRIOR TO THE INSTALLATION OF MATERIALS.

1.10 SERVICE AND METERING

A. NEW UNDERGROUND FACILITIES SHALL BE PROVIDED FOR THE POWER COMPANY'S PRIMARY LINES. VERIFY AND COORDINATE WITH THE UTILITY COMPANY FOR EXACT REQUIREMENT FOR CONDUITS AND CONDUCTORS.

B. NEW UNDERGROUND FACILITIES SHALL BE PROVIDED FOR THE POWER COMPANY'S SECONDARY LINES. VERIFY AND COORDINATE WITH THE UTILITY COMPANY FOR EXACT REQUIREMENT FOR CONDUITS AND CONDUCTORS.

C. PROVIDE TRANSFORMER PADS AND SERVICE AS SHOWN ON PLANS.

D. PAY ALL COSTS AND POWER COMPANY CHARGES.

E. POWER IS PROVIDED BY THE LOCAL UTILITY COMPANY.

F. COORDINATE ALL REQUIREMENTS WITH THE UTILITY COMPANY PRIOR TO BID.

1.11 INSPECTION

A. COOPERATE WITH THE OWNER AND PROVIDE ASSISTANCE AT ALL TIMES FOR THE INSPECTION OF THE ELECTRICAL WORK. REMOVE COVERS, OPERATE MACHINERY, OR PERFORM ANY REASONABLE WORK, WHICH IN THE OPINION OF THE OWNER, WILL BE NECESSARY TO DETERMINE THE QUALITY OR ADEQUACY OF THE WORK.

B. IF ANY MATERIAL DOES NOT CONFORM TO THESE SPECIFICATIONS, REMOVE THE MATERIALS FROM THE PREMISES, WITHIN THREE DAYS AFTER BEING NOTIFIED BY THE OWNER.

C. WORK SHALL NOT BE CLOSED IN OR COVERED BEFORE INSPECTION AND APPROVAL BY THE OWNER.

1.12 QUALITY OF MATERIALS

A. ALL ELECTRICAL MATERIALS USED ON THIS PROJECT SHALL BE NEW AND FREE FROM DEFECTS.

B. ALL ELECTRICAL MATERIALS USED ON THIS PROJECT SHALL CONFORM WHERE APPLICABLE, TO THE FOLLOWING STANDARDS, UNLESS OTHERWISE NOTED:

1. NEMA - NATIONAL ELECTRICAL MANUFACTURERS ASSOCIATION
2. ANSI - AMERICAN NATIONAL STANDARDS INSTITUTE
3. UL - UNDERWRITERS LABORATORIES, INC.

C. EACH TYPE OF MATERIAL SHALL BE OF THE SAME MANUFACTURER AND QUALITY THROUGHOUT THE WORK.

1.13 SUBMITTAL & SHOP DRAWINGS

A. SHOP DRAWINGS AND SUPPLEMENTAL DATA WHERE CALLED FOR, SHALL BE PREPARED AND SUBMITTED AS PER GENERAL CONDITIONS. FINAL CORRECTED COPIES OF SCHEDULES AND SHOP DRAWINGS OR SUPPLEMENTAL DATA TO ARCHITECT FOR REVIEW SHALL BE SUCH AS TO PROVIDE ONE (1) FOR ARCHITECT'S FILES, ONE (1) FOR ELECTRICAL ENGINEER'S FILES, TWO (2) FOR THE OWNER, ONE (1) TO CONTRACTOR'S JOB FILES, AND SUCH ADDITIONAL COPIES AS CONTRACTOR MAY DESIRE FOR HIS OWN OFFICE FILES AND/OR FOR DISTRIBUTION BY HIM TO SUBCONTRACTORS OR VENDORS. EXCEPTIONS SHALL BE AS NOTED IN THE DIVISION 1 SPECIFICATION SECTIONS.

B. SHOP DRAWINGS AND SUPPLEMENTAL DATA ARE REQUIRED UNLESS SPECIFICALLY NOT REQUESTED BY THE ENGINEER. SHOP DRAWINGS SHALL BE SUBMITTED FOR ALL ELECTRICAL EQUIPMENT PERTAINING TO JOB. (NOT LIMITED TO ELECTRICAL EQUIPMENT, LIGHTS, RECEPTACLES, BOXES AND ENCLOSURES, CONDUIT, WIRE, ETC.)

C. THE SHOP DRAWINGS AND SUPPLEMENTAL DATA SHOWN CALLED FOR SHALL BE SUBMITTED AS THE INSTRUMENTS OF THE CONTRACTOR, EVEN THOUGH THEY MAY HAVE BEEN PREPARED BY A SUBCONTRACTOR, SUPPLIER, DEALER, MANUFACTURER, OR BY ANY OTHER PERSON, FIRM OR ORGANIZATION. PRIOR TO SUBMISSION, THE CONTRACTOR SHALL UNDERTAKE HIS OWN REVIEW AND STAMP WITH HIS ACCEPTANCE, THEN SUBMIT TO THE ENGINEER FOR HIS REVIEW. BY ACCEPTING AND SUBMITTING SHOP DRAWINGS AND SUPPLEMENTAL DATA, THE CONTRACTOR REPRESENTS THAT HE HAS DETERMINED AND VERIFIED ALL FIELD MEASUREMENTS, THE PHYSICAL CONSTRUCTION, THE QUALITY OF MATERIALS, THE APPLICABILITY OF CATALOG NUMBERS, AND SIMILAR DATA, OR WILL DO SO, AND THAT HE HAS CHECKED AND COORDINATED EACH SHOP DRAWINGS WITH THE REQUIREMENTS OF THE TRADES SHALL BE RESOLVED BY THE CONTRACTOR IN THE SHOP DRAWINGS, IF POSSIBLE, BUT IN ANY EVENT PRIOR TO THE ACTUAL CONSTRUCTION.

D. ALL SHOP DRAWINGS SHALL BE DRAWN ACCURATELY ON PAPER SUITABLE FOR DUPLICATE COPYING BY BLACK, OR BLUE LINE PRINTING PROCESSES, OR XEROX.

E. SUPPLEMENTAL DATA SHALL INCLUDE INFORMATION AS NOTED IN THE SPECIFICATION PARAGRAPHS REQUIRING THEM, OR AS REQUESTED BY THE ARCHITECT.

F. THE ENGINEER WILL REVIEW SHOP DRAWINGS AND SUPPLEMENTAL DATA SUBMITTED BY THE CONTRACTOR ONLY FOR GENERAL DESIGN CONFORMANCE WITH THE CONCEPT OF THE PROJECT AND COMPLIANCE WITH THE INFORMATION GIVEN IN THE CONTRACT DOCUMENTS.

G. IF MORE THAN ONE (1) SUBMISSION OF SHOP DRAWINGS OR SUPPLEMENTAL DATA IS REQUIRED FOR ANY GIVEN ITEM TO MEET THE PROJECT SPECIFICATIONS, THE COST OF REVIEWING THESE ADDITIONAL SUBMISSIONS SHALL BE CHARGED DIRECTLY AGAINST THE CONTRACTOR AND THE OWNER WILL WITHHOLD THE FUNDS NECESSARY TO COVER THESE COSTS.

H. SHOP DRAWINGS, IF REQUESTED, MUST BE SUBMITTED TO AND FAVORABLY REVIEWED BY THE ARCHITECT AND/OR ENGINEER BEFORE BEING USED BY THE CONTRACTOR ON THE JOB.

I. SHOP DRAWINGS DEADLINE: IN ADDITION TO REQUIREMENTS AS ESTABLISHED IN DIVISION 1 OF THE GENERAL CONDITIONS, THE CONTRACTOR SHALL WITHIN 35 CALENDAR DAYS AFTER THE NOTICE TO PROCEED OF THE CONTRACT, SUBMIT TO THE ARCHITECT FOR APPROVAL THE SHOP DRAWINGS FOR EQUIPMENT AND/OR SPECIALTY ITEMS AS LISTED IN EACH DIVISION OF WORK. THE SHOP DRAWINGS SHALL BE SUBMITTED IN ADDITION TO THE LIST OF MATERIALS REQUIRED BY THE "SPECIFIED ITEMS - SUBSTITUTES" PARAGRAPH.

J. SHOP DRAWINGS DELINEATION: THE SHOP DRAWINGS SHALL BE DRAWN TO SCALE AND SHALL BE COMPLETELY DIMENSIONED, BRINGING THE PLAN TOGETHER WITH SUCH SECTIONS AS ARE NECESSARY TO CLEARLY SHOW CONSTRUCTION DETAIL.

K. RESPONSIBILITY: THESE SHOP DRAWINGS AND ALL SUPPORTING DATA, CATALOGS, ETC., SHALL BE PREPARED BY THE CONTRACTOR OR HIS SUPPLIERS, BUT SHALL BE SUBMITTED AS THE INSTRUMENTS OF THE CONTRACTOR. THEREFORE, THE CONTRACTOR SHALL CHECK THE DRAWINGS OF HIS SUPPLIERS AS WELL AS HIS OWN DRAWINGS BEFORE SUBMITTING THEM AND THAT IT HAS BEEN CHECKED BY THE CONTRACTOR IN ACCORDANCE WITH THE SPECIFICATIONS. IF SUCH SHOP DRAWINGS SHOW VARIATIONS FROM CONTRACT DOCUMENTS, WHETHER BECAUSE OF STANDARD SHOP PRACTICE OR OTHER REASONS, THE CONTRACTOR SHALL MAKE SPECIAL MENTION THEREOF IN HIS LETTER TRANSMITTAL. THE CONTRACTOR SHALL BE FULLY RESPONSIBLE FOR OBSERVING THE NEED FOR AND MAKING ANY CHANGES IN THE ARRANGEMENT OF PIPING, CONNECTIONS, WIRING, MANNER OF INSTALLATION ETC., WHICH MAY BE REQUIRED BY THE EQUIPMENT HE PROPOSES TO SUPPLY BOTH AS IT PERTAINS TO HIS OWN WORK AND ANY WORK INTERCONNECTED UNDER OTHER PARTS, HEADINGS, OR DIVISIONS OF DRAWINGS AND SPECIFICATIONS.

L. IDENTIFICATION: SHOP DRAWINGS SHALL BE ENTITLED WITH THE NAME OF THE PROJECT ON EACH SHEET AND SHALL OTHERWISE BE IDENTIFIED BY LISTING THE PARTICULAR DIVISION, SECTION, ARTICLE OR REFERENCE OF THE WORK PERTAINING. SUBMIT DIFFERENT ITEMS ON SEPARATE SHEETS. ALL SUBMITTALS SHALL BE NUMBERED SERIALLY.

M. MANNER: FURNISH FOR ARCHITECT'S APPROVAL SEPARATE SHEETS OF SUBMITTAL OF EACH SPECIALTY ITEM IN THE FOLLOWING MANNER:

1. CATALOG CUTS SHALL BE PHOTOCOPIED OR REPRODUCED IN SOME OTHER ACCEPTABLE MANNER AND SUBMITTED ON PDF, NOTING ONLY THE ITEMS IN QUESTION, TOGETHER WITH THE DESCRIPTIVE (SPECIFICATION) DATA COMPLETE. DRAWINGS SHALL BE SUBMITTED IN PDF FORM.
2. EACH SHEET SHALL BE IDENTIFIED WITH THE DIVISION, SECTION, ARTICLE OR REFERENCE IN THE CONTACT DOCUMENTS, WHICH COVERS THE ITEM SUBMITTED FOR APPROVAL.
3. EACH SHEET SHALL BE IDENTIFIED WITH THE PROJECT NAME AND THE ARCHITECT.
4. EACH SHEET SHALL BEAR THE CONTRACTOR'S STAMP AND SIGNATURE OF APPROVAL.

1.14 SPECIFIED ITEMS - SUBSTITUTES

A. WHEREVER CATALOG NUMBERS AND SPECIFIC BRANDS OR TRADE NAMES FOLLOWED BY THE DESIGNATION "OR APPROVED EQUAL" ARE USED IN CONJUNCTION WITH A DESIGNATED MATERIAL, PRODUCT, THICKNESS, OR SERVICE MENTIONED IN THIS SPECIFICATION, THEY ARE USED TO ESTABLISH THE STANDARDS OF QUALITY, UTILITY AND APPEARANCE REQUIRED. SUBSTITUTIONS, WHICH ARE EQUAL IN QUALITY, UTILITY, AND APPEARANCE TO THOSE SPECIFIED, WILL BE APPROVED, SUBJECT TO THE FOLLOWING PROVISIONS: ALL SUBSTITUTIONS MUST BE APPROVED BY THE ARCHITECT AND/OR ENGINEER IN WRITING. FOR THIS PURPOSE, THE CONTRACTOR SHALL SUBMIT TO THE ARCHITECT, WITHIN 30 CALENDAR DAYS AFTER THE DATE OF COMMENCEMENT SPECIFIED IN THE NOTICE TO PROCEED, A TYPEWRITTEN LIST CONTAINING A DESCRIPTION OF EACH PROPOSED SUBSTITUTE ITEM OR MATERIAL. THE ARCHITECT MAY INCREASE THE SUBMITTAL PERIOD BEYOND 30 CALENDAR DAYS IF THE SCHEDULE ALLOWS. SUFFICIENT DATA, DRAWINGS, SAMPLES, LITERATURE OR OTHER DETAILED INFORMATION THAT WILL DEMONSTRATE TO THE ARCHITECT THAT THE PROPOSED SUBSTITUTE IS EQUAL IN QUALITY, UTILITY, AND APPEARANCE TO THE MATERIAL SPECIFIED SHALL BE APPENDED TO THIS LIST. THE ARCHITECT WILL APPROVE, IN WRITING, SUCH PROPOSED SUBSTITUTION WHICH AFFECT OTHER PARTS OF THE CONTRACTOR'S OWN WORK OR THE WORK OF OTHERS.

B. FAILURE OF THE CONTRACTOR TO SUBMIT PROPOSED SUBSTITUTIONS FOR APPROVAL IN THE MANNER DESCRIBED ABOVE AND WITHIN THE TIME PRESCRIBED SHALL BE SUFFICIENT CAUSE FOR DISAPPROVAL BY THE ENGINEER OF ANY SUBSTITUTIONS OTHERWISE PROPOSED.

C. WHEREVER CATALOG NUMBERS AND SPECIFIC BRANDS OR TRADE NAMES NOT FOLLOWED BY THE DESIGNATION "OR APPROVED EQUAL" MATERIAL, PRODUCT, THING OR SERVICE MENTIONED IN THESE SPECIFICATIONS, NO SUBSTITUTIONS WILL BE ACCEPTED FOR APPROVAL.

D. WHEREVER MORE THAN ONE MANUFACTURER'S PRODUCT IS SPECIFIED, THE FIRST-NAME PRODUCT IS THE BASIS FOR THE PROJECT DESIGN AND THE USE OF ALTERNATIVE NAME MANUFACTURER'S PRODUCTS OR SUBSTITUTES MAY REQUIRE MODIFICATIONS IN THE PROJECT DESIGN AND CONSTRUCTION. IF SUCH ALTERNATIVES ARE PROPOSED BY THE CONTRACTOR AND ARE FAVORABLY REVIEWED BY THE ENGINEER THE CONTRACTOR SHALL ASSUME COSTS REQUIRED TO MAKE NECESSARY REVISIONS AND MODIFICATIONS INCLUDING ADDITIONAL COSTS TO THE OWNER FOR EVALUATIONS OF MODIFICATIONS OF THE PROJECT DESIGN SUBMITTED BY THE CONTRACTOR TO THE ARCHITECT.

E. WHEN MATERIALS ARE SPECIFIED BY THE FIRST MANUFACTURER'S NAME, AND PRODUCT NUMBER, SECOND MANUFACTURER'S NAME, OR APPROVED EQUAL, THE SECOND MANUFACTURER'S PROJECT SHALL BE SUBMITTED IN ACCORDANCE WITH THE ABOVE PARAGRAPH.

F. IF THE ENGINEER IN THIS REVIEW OF THE LIST OF MATERIALS AND EQUIPMENT REQUIRES REVISIONS OR CORRECTIONS TO BE MADE OR SHOP DRAWINGS AND/OR SUPPLEMENTAL DATA TO BE SUBMITTED, THE CONTRACTOR SHALL PROMPTLY DO SO. IF ANY PROPOSED MATERIAL IS JUDGED BY THE ENGINEER TO BE UNACCEPTABLE, THE SPECIFIED ITEM SHALL BE PROVIDED; FURTHER SUBMISSIONS WILL NOT BE ALLOWED, UNLESS DIRECTED BY THE ENGINEER.

G. PHYSICAL SAMPLES MAY BE REQUIRED. IF TESTS FOR THE DETERMINATION OF EQUALITY AND UTILITY ARE REQUIRED BY THE ENGINEER THEY SHALL BE MADE BY A TESTING LABORATORY, WITH ACCEPTANCE OF THE TEST PROCEDURE FIRST GIVEN BY THE ENGINEER, AND AT THE EXPENSE OF THE CONTRACTOR.

H. IN REVIEW OF THE DATA SUBMITTED IN SUPPORT OF SUBSTITUTIONS, THE ENGINEER WILL USE FOR PURPOSES OF COMPARISON ALL THE CHARACTERISTICS OF THE SPECIFIED ITEM AS THEY APPEAR IN THE MANUFACTURER'S PUBLISHED DATA EVEN THOUGH ALL THE CHARACTERISTICS OF THE SPECIFIED ITEM MAY NOT HAVE BEEN PARTICULARLY MENTIONED IN THE MANUFACTURER'S PUBLISHED DATA. IF MORE THAN TWO SUBMISSIONS OF DATA ARE REQUIRED, THE COST OF REVIEWING THE DATA GOES AGAINST THE CONTRACTOR, AND THE OWNER WILL WITHHOLD THE FUNDS NECESSARY TO COVER THESE COSTS. ONLY ONE (1) SUCH REQUEST MAY BE SUBMITTED. THE ENGINEER'S REJECTION OF ANY SUBSTITUTE SHALL AUTOMATICALLY REQUIRE THE CONTRACTOR TO FURNISH THE SPECIFIED ITEM WITHOUT FURTHER DISCUSSION OR DELAY.

1.15 EQUIPMENT IDENTIFICATION

A. THE MAIN SWITCHBOARD, AND ALL PANELBOARDS, DISCONNECT SWITCHES, TRANSFORMERS, BOXES, ETC., SHALL BE PROPERLY IDENTIFIED WITH A DESCRIPTIVE NAMEPLATE. NAMEPLATES SHALL BE MADE OF 1/16 INCH LAMINATED PLASTIC WITH BLACK BACKGROUND AND WHITE LETTERS. SIZE OF LETTERS SHALL BE 1/4 INCH HIGH. LETTERS SHALL BE MACHINE ENGRAVED. ALL NAMEPLATES SHALL BE SCREW MOUNTED WITH OVAL HEAD MACHINE SCREWS TAPPED INTO FRONT OF PANEL.

B. PROVIDE HOLDERS WITH IDENTIFICATION CARDS FILLED OUT IN A TYPEWRITTEN FORMAT OF CIRCUIT DESIGNATIONS FOR EACH PANELBOARD.

C. EACH BRANCH CIRCUIT, CONTROL, AND SIGNAL CONDUCTOR SHALL BE LABELED WITH THE CIRCUIT NUMBER OR TERMINAL NUMBER IT IS CONNECTED TO. USE TAG VINYL OR BRANDY PERMASHIELD MYLAR MARKERS. CONDUCTORS SHALL BE LABELED AT EACH PANELBOARD, SWITCHBOARD, CONTROL CENTER, TERMINAL CABINET, PULL BOX, AND EACH POINT OF UTILIZATION SUCH AS FIXTURES, MOTORS, CONTROLS, ETC. LABELING SHALL CORRESPOND TO CONTROL DIAGRAMS WHERE APPLICABLE.

1.16 WARRANTY

A. GUARANTEE ALL WORK FOR ONE YEAR FROM DATE OF ACCEPTANCE AGAINST ALL DEFECTS IN MATERIAL, EQUIPMENT AND WORKMANSHIP.

1.17 RECORD AS-BUILT DRAWINGS

A. THE CONTRACTOR SHALL KEEP A SEPARATE SET OF ELECTRICAL DRAWINGS AT THE JOB SITE TO BE USED AS RECORD DRAWINGS. THESE DRAWINGS ARE TO BE KEPT CURRENT AND IN A NEAT AND CLEAN CONDITION AT ALL TIMES. THEY ARE TO BE AVAILABLE FOR INSPECTION BY THE ARCHITECT OR ENGINEER AT ANY TIME DURING SITE VISITATIONS. THESE DRAWINGS SHALL BE "RED LINED" TO INDICATE ALL CHANGES IN EQUIPMENT, DEVICE, AND OUTLET LOCATIONS; AND TO INDICATE THE TRUE LOCATIONS OF ALL CONCEALED OR UNDERGROUND WORK W

ELECTRICAL SPECIFICATIONS (CONTINUED)

G. CONDUIT SUPPORTS:

1. PIPE HANGERS FOR INDIVIDUAL CONDUITS SHALL BE THREADED SUSPENSION ROD. THE PIPE RING SHALL BE MALLEABLE IRON, SPLIT AND HINGED, OR SHALL BE SPRINGABLE WROUGHT STEEL. RINGS SHALL BE BOLTED TO OR INTERLOCKED WITH THE SUSPENSION ROD SOCKET.

2. PIPE RACKS FOR GROUPS OF PARALLEL CONDUITS SHALL BE CONSTRUCTED OF GALVANIZED STRUCTURAL STEEL PREFORMED CHANNELS OF LENGTH AS REQUIRED, SUSPENDED ON THREADED RODS AND SECURED THERETO WITH NUTS ABOVE AND BELOW THE CROSS BAR.

3. FACTORY MADE PIPE STRAPS SHALL BE ONE-HOLE MALLEABLE IRON OR TWO-HOLE GALVANIZED CLAMPS.

4. STRUT CHANNEL SHALL BE: KINDORF, UNISTRUT, T&B, OR APPROVED EQUAL.

H. OUTLET BOXES: GALVANIZED STEEL. BOXES INSTALLED IN ANY EXTERIOR LOCATION, WHERE EXPOSED TO RAIN OR WHERE EXPOSED TO MOISTURE LADEN ATMOSPHERE SHALL BE CAST SCREW HUB TYPE WITH GASKETED WEATHERPROOF COVERS. BOXES FOR VAPOR PROOF OR EXPLOSION PROOF APPLICATIONS SHALL BE DESIGNED SPECIFICALLY FOR SUCH USE.

1. EACH BOX SHALL BE LARGE ENOUGH TO ACCOMMODATE THE REQUIRED NUMBER AND SIZES OF CONDUITS, WIRES, SPLICES AND DEVICES BUT NOT SMALLER THAN SIZE SHOWN OR SPECIFIED.

I. PULL BOXES AND CABINETS:

1. PREFABRICATED CONCRETE TYPE, CHRISTY CONCRETE PRODUCTS, BROOKS, OR APPROVED EQUAL. ALL BOXES SHALL HAVE STANDARD BRASS HOLDDOWN BOLTS AND HARDWARE. BOXES LOCATED IN PAVED AREAS OR OTHER AREAS OVER WHICH VEHICLES NORMALLY MAY TRAVEL SHALL HAVE TRAFFIC COVERS.

2. ALL PULL BOXES AND CABINETS SHALL BE CODE GAUGE GALVANIZED STEEL.

2.11 WIRE AND CABLE

A. LABELING:

MARKED ON 24 INCH CENTERS AS FOLLOWS:

1. UNDERWRITERS LABEL
2. GAUGE
3. VOLTAGE
4. KIND OF INSULATION
5. NAME OF MANUFACTURER
6. TRADE NAME

B. INSULATION:

1. ALL CONDUCTORS 10 AWG AND SMALLER, SHALL BE 600 VOLT, TYPE THWN, THW, TW OR THHN UNLESS NOTED OTHERWISE.

2. ALL CONDUCTORS FOR UNDERGROUND AND CONDUCTORS 8 AWG AND LARGER SHALL BE 600 VOLT, TYPE XHHW OR THWN UNLESS NOTED OTHERWISE.

3. INSULATION TYPE XHHW SHALL BE USED FOR WIRE SIZES 2 AWG AND LARGER.

4. ALL CIRCUIT CONDUCTORS INSTALLED WITHIN FLUORESCENT FIXTURE RACEWAYS SHALL BE 600 VOLT, 105-DEGREE TYPE RHH, OR THHN, EXCEPT IN FIXTURES THAT HAVE WIRING RACEWAYS SPECIFICALLY APPROVED FOR 75 DEGREE CENTIGRADE WIRE.

C. GROUNDING WIRE:

1. GROUNDING WIRE 1/0 AWG OR LARGER TINNED STRANDED COPPER CABLE. ALL SMALLER GROUND WIRES SHALL BE INSULATED WITH GREEN COLOR INSULATION

D. COLOR CODING OF CONDUCTORS:

1. THE GUIDELINES OF THE NEC SHALL BE FOLLOWED WHEN SELECTING WIRE COLORS. GENERALLY, ALL PHASE WIRES FOR POWER CONDUCTORS OF THE SAME SYSTEM MAY BE THE SAME COLOR EXCEPT AS FOLLOWS:

PHASE	120/208 VOLTS	277/480 VOLTS
PHASE A	BLACK	BROWN
PHASE B	RED	ORANGE
PHASE C	BLUE	YELLOW
NEUTRAL	WHITE	GRAY
GROUND	GREEN	GREEN
ISOLATED GROUND	LIGHT GREEN OR LIGHT GREEN WITH WHITE STRIPE	

2. THESE COLORS MAY BE THE CONDUCTOR INSULATION COLORS OR THE COLORS MAY BE APPLIED USING INDICATING TAPE MANUFACTURED FOR THE PURPOSE.

3. IN ADDITION TO COLOR CODING, ALL POWER, CONTROL, AND ALARM WIRING SHALL BE NUMBERED AND IDENTIFIED BY MEANS OF WIRE MARKERS AT ALL SWITCHBOARDS, PANELBOARDS, AUXILIARY GUTTERS, JUNCTION BOXES, PULL BOXES, RECEPTACLE OUTLETS, LIGHT OUTLETS, DISCONNECT SWITCHES, AND CIRCUIT BREAKERS. THESE MARKERS SHALL CORRESPOND TO NUMBERS ON SHOP DRAWINGS.

4. CONDUCTORS IN SIZES UP THROUGH 10 AWG SHALL HAVE SOLID COLOR FINISH AS LISTED ABOVE. 8 AWG AND LARGER SHALL BE CODED BY APPLICATION OF PHASE TAPE FOR MINIMUM OF 6" LENGTH ON CONDUCTOR. CODING SHALL OCCUR ON ALL SPLICES AND TERMINATION AND PULL BOXES.

E. CONDUCTORS:

1. UNLESS SPECIFICALLY NOTED OTHERWISE HEREIN, ALL CONDUCTORS FOR GENERAL WIRING SHALL BE A MINIMUM OF 98% CONDUCTIVITY, STRANDED, SOFT DRAWN COPPER.

2. CONDUCTORS FOR LIGHTING AND RECEPTACLE BRANCH CIRCUITS NO. 8 AND SMALLER SHALL BE SIMILAR TO THE ABOVE EXCEPT SOLID COPPER MAY BE USED.

3. EXCEPT WHERE NOTED ON THE PLANS OR IN THIS SPECIFICATION, THE MINIMUM CONDUCTOR SIZE FOR BRANCH CIRCUITS SHALL BE NO. 12. MINIMUM SIZE MECHANICAL EQUIPMENT CONTROL CIRCUITS WHERE COVERED UNDER THIS SPECIFICATION SHALL BE NO. 14.

4. ALUMINUM CONDUCTORS ARE NOT ALLOWED UNLESS SPECIFICALLY CALLED OUT FOR ON DRAWINGS.

F. PULLING LUBRICANT: UL APPROVED.

G. CONNECTIONS:

1. NUMBER 8 AWG AND SMALLER, PRE-INSULATED SPRING TYPE CONNECTORS. THREADED OR CRIMP TYPES WILL NOT BE ACCEPTED. USE SCOTCHLOCK, HYDENT, T&B OR APPROVED EQUAL.

2. TERMINALS FOR STRANDED CONDUCTORS 8 AWG AND SMALLER SHALL BE A PRE-INSULATED CRIMP TYPE.

3. LUGS AND CONNECTORS FOR CONDUCTORS 6 AWG AND LARGER SHALL BE COMPRESSION TYPES OF ONE PIECE TUBULAR CONSTRUCTION WITH FLAT RECTANGULAR TONGUES. TWO HOLE LUGS SHALL BE USED FOR SIZES #4/0 AND LARGER. FITTINGS FOR COPPER CONDUCTORS SHALL BE TIN-PLATED COPPER. FITTINGS FOR ALUMINUM CONDUCTORS SHALL BE TIN-PLATED ALUMINUM, FACTORY FILLED WITH A CORROSION INHIBITING AND OXIDE PENETRATING COMPOUND.

4. CAST RESIN KITS SHALL BE SCOTCHLOCK SEALING PACKS FOR WIRE SIZE TO #10 AND SCOTCHLOCK KITS FOR LARGER SPLICES AS RECOMMENDED BY 3M COMPANY.

2.12 WIRING DEVICES

A. WALL SWITCHES:

1. UREA BASE, TOGGLE TYPE WITH 20A 120/277V. A.C. RATING FOR FULL CAPACITY OF CONTACTS FOR INCANDESCENT OR FLUORESCENT LAMP LOADS. SWITCHES SHALL BE BACK AND SIDE WIRED, SELF GROUNDING. CONTACTS SHALL BE SILVER-CADMIUM OXIDE DESIGNED FOR QUIET OPERATION. COMPLY WITH FEDERAL SPECIFICATION W-S-896E WITH NEMA WD-1-3.02 AND UL 20 TESTS OR LATEST REVISIONS. COLOR AS SELECTED BY ARCHITECT OR OWNER.

2. SCHEDULE OF ACCEPTABLE TYPES:

SWITCH TYPE	COOPER	LEVITON	HUBBELL
TOGGLE SWITCH:			
SINGLE POLE	1221I	1221-2I	1221I
DOUBLE POLE	1222I	1222-2I	1222I
THREE WAY	1223I	1223-2I	1223I
FOUR WAY	1224I	1224-2I	1224I
DECORATOR ROCKER SWITCH:			
SINGLE POLE	7621V	5621-2I	DS120I
DOUBLE POLE	7622V		DS220I
THREE WAY	7623V	5623-2I	DS320I
FOUR WAY	7624V	5624-2I	DS420I
SPECIAL:			
SPDT CNTR OFF	4356	1285	1385
DPDT CNTR OFF	4361	1285	1385
PDT (2-POS)	1276		
MOMENTARY:			
SPDT CNTR OFF	4354	4921	1557
DOOR JAMB: N.O.	4029	2968	NA
DOOR JAMB: N.C.	4030	2969	NA

3. WEATHERPROOF SWITCH (SP 125V, 10A) - HUBBELL #5121-0, OR APPROVED EQUAL, COMPLETE WITH SWITCH AND GASKET.

4. KEY SWITCHES: EQUIVALENT TO LISTED SWITCHES, ACTIVATED WITH REMOVABLE KEY.

5. SWITCH WITH PILOT LIGHT - COOPER #2221PL, OR APPROVED EQUAL.

B. CONVENIENCE OUTLETS:

1. GROUNDING, 20 AMPERE, 125 VOLT, NEMA 5-20R CONFIGURATION, NYLON HOUSING, SELF GROUNDING. COMPLY TO FEDERAL SPECIFICATION W-C-596E, NEMA WD1-4.02 AND UL 498 OR LATEST REVISIONS. COLOR AS SELECTED BY ARCHITECT OR OWNER.

2. SCHEDULE OF APPROVED TYPES:

OUTLET TYPE	COOPER	LEVITON	HUBBELL
20 A, 125 V; HEAVY USE DUPLEX	5362	5362A	5362
20 A, 125 V; DUPLEX	5362	5362A	5352
30 A, 125/250 V	5744N*	278	9430A
50 A, 125/250 V	5754N**	279	9450A
20 A, 125 V; ISOLATED GND	IG5362	5362IG	IG5362
20 A, 125 V, GFI	GF5342	6899GFI	GF53522.03

3. WEATHERPROOF RECEPTACLE "GFCI" - HUBBELL #5103-0, OR APPROVED EQUAL.

4. WEATHERPROOF AND LOCKABLE RECEPTACLE, WEATHERPROOF WITH PROVISION FOR PADLOCK - BRYANT # 63101-PL, OR APPROVED EQUAL.

5. WEATHERPROOF RECEPTACLE INTENDED FOR UNATTENDED USE (IRRIGATION CONTROLLER OUTLET, SUMP PUMP OUTLET, ETC) - COVER PLATE SHALL BE PROVIDED WITH A POLYCARBONATE CORD CAP GASKET ENCLOSURE LISTED "SUITABLE FOR WET LOCATIONS WHILE IN USE". USE TAYMAC SAFETY OUTLET ENCLOSURE, OR OR APPROVED EQUAL.

6. ISOLATED GROUND RECEPTACLE, NEMA 5-20R WITH AN ORANGE COLOR TRIANGLE LOCATED ON THE FACE OF THE RECEPTACLE PER NEC 406.2(D).

C. PLATES: PLATES SHALL BE SUPPLIED FOR EVERY LOCAL SWITCH, RECEPTACLE, ETC. PLATES SHALL BE STAINLESS STEEL OR NYLON TO MATCH WALL FINISH. FURNISH WITH ENGRAVED OR ETCHED DESIGNATIONS UNDER ANY ONE OF THE FOLLOWING CONDITIONS:

1. THREE GANG OR LARGER GANG SWITCHES.

2. SWITCHES IN LOCATIONS FROM WHICH THE EQUIPMENT OR CIRCUITS CONTROLLED CANNOT BE READILY SEEN.

3. WHERE SO INDICATED ON THE DRAWINGS.

4. AS REQUIRED ON ALL CONTROL CIRCUIT SWITCHES, SUCH AS HEATER CONTROLS, ETC.

5. WHERE RECEPTACLES ARE OTHER THAN STANDARD DUPLEX RECEPTACLES, TO INDICATE VOLTAGE AND PHASE.

6. PROVIDE COVER PLATES FOR ALL TELEPHONE AND COMPUTER OUTLETS. SEE TECHNOLOGY DRAWINGS TO VERIFY AND COORDINATE.

2.13 LIGHTING FIXTURES AND ACCESSORIES

A. LIGHT FIXTURES: SUPPLY LIGHT FIXTURES AS INDICATED ON FIXTURE SCHEDULE.

1. MANUFACTURER OF FIXTURES: ALL FIXTURES OF ONE TYPE SHALL BE OF ONE MANUFACTURER AND OF IDENTICAL FINISH AND APPEARANCE.

B. ACCESSORIES: ALL FIXTURES SHALL BE COMPLETE WITH ACCESSORIES, END REQUIRED FOR THE SPECIFIC INSTALLATION.

C. DIMMABLE LED DRIVERS

1. DIMMING RANGE: CONTINUOUS DIMMING FROM 100 PERCENT TO 10 PERCENT RELATIVE LIGHT OUTPUT UNLESS DIMMING CAPABILITY TO LOWER LEVEL IS INDICATED, WITHOUT FLICKER.

D. IT SHALL BE THE RESPONSIBILITY OF THE CONTRACTOR TO COORDINATE FIXTURES WITH CEILING TYPES AND SUPPLY VOLTAGES.

E. FIXTURES INSTALLED IN RATED CEILINGS SHALL BE LISTED FOR USE IN SUCH CEILINGS.

2.14 LIGHTING CONTROL

A. REFER TO DRAWINGS FOR SCHEDULES AND/OR SPECIFICATION NOTES.

2.15 OCCUPANCY SENSORS

A. REFER TO DRAWINGS FOR SCHEDULES AND/OR SPECIFICATION NOTES.

2.16 TERMINAL CABINETS

A. ALL TERMINAL CABINETS SHALL BE SIZED PER APPLICABLE ELECTRICAL CODE, U.L. LISTED, AND SUITABLE FOR THE CONDITIONS OF INSTALLATION. EACH CABINET SHALL BE PROVIDED HAVING SUFFICIENT VOLUME, PROPER DIMENSIONS, AND GEOMETRY FOR THE DEVICE(S) TO BE INSTALLED AND THE NUMBER OF CONDUITS AND WIRES AT THAT LOCATION.

B. ALL TERMINAL CABINETS SHALL BE PROVIDED WITH HINGED LOCKABLE DOORS SUITABLE TO THE CONDITIONS OF THE INSTALLATION.

C. CONSTRUCTION OF TERMINAL AND DEVICE CABINETS SHALL BE SIMILAR TO PANELBOARDS, FLUSH COMBINATION LATCH AND LOCK, RECESSED IN FINISHED AREAS, ETC. ALL LOCKS SHALL BE KEYED ALIKE BUT DIFFERENT FROM PANELBOARDS. ENCLOSURE SHALL BE NEMA 3 (RAIN AND DUST TIGHT) WHERE INSTALLED OUTDOORS UNLESS OTHERWISE SPECIFIED. A "PLAN POUCH" SHALL BE FACTORY ASSEMBLED TO THE INTERIOR OF THE CABINET DOOR SUITABLE FOR HOLDING A PLAN OF THE ASSOCIATED CONTROL SCHEME.

D. BUILDING SIGNAL TERMINAL CABINET SIZES SHALL BE SUFFICIENT FOR THE RACEWAYS INDICATED ON THE DRAWINGS AND FOR THE TERMINATION AND CONTROL EQUIPMENT REQUIRED. THE CONTRACTOR SHALL SIZE THE CABINETS TO PROVIDE AMPLE WIRING AND TERMINATION SPACE FOR THE EQUIPMENT, WIRES, AND CABLES INDICATED ON THE DRAWINGS. THE SIZES SHALL NOT BE LESS THAN THOSE INDICATED ON THE DRAWINGS. MINIMUM TERMINAL CABINET SIZE FOR ANY LOCATION SHALL BE 24"H X 24"W X 6"D WHERE NOT NOTED OTHERWISE.

E. A BACKBOARD OF 5/8" MINIMUM PLYWOOD, UNLESS NOTED ON PLANS, OR A METAL EQUIPMENT MOUNTING PANEL PROVIDED BY THE CABINET MANUFACTURER HAVING A SIZE APPROXIMATELY THE SAME AS THE DOOR OPENING SHALL BE INSTALLED WITHIN THE CABINET.

F. METAL DIVIDERS SHALL BE PROVIDED WHERE INDICATED ON THE DRAWINGS. FINISH SAME AS PANEL INTERIOR.

G. TERMINAL STRIPS OR BLOCKS SHALL BE DOUBLE ROW STRAP SCREW WITH CLAMP OR TUBE-SCREW TYPE WITH WRITE-ON STRIP DOWN THE CENTER. THEY SHALL ACCEPT WIRE SIZES AS INDICATED ON THE DRAWINGS AND HAVE BARRIERS BETWEEN THE POLES. EXCEPT WHERE NOTED OTHERWISE, PROVIDE AT LEAST 10% SPARE TERMINAL POINTS. PUNCH BLOCKS SHALL BE USED TO TERMINATE COMMUNICATIONS CABLES AND OTHER SMALL SIZE WIRES. SEE TECHNOLOGY DRAWINGS TO VERIFY AND COORDINATE.

H. EXCEPT WHERE OTHERWISE SPECIFICALLY NOTED, PROVIDE ALL TERMINAL STRIPS, WIRING CHANNELS, MARKERS, AND OTHER DEVICES AS REQUIRED. SEE TECHNOLOGY DRAWINGS TO VERIFY AND COORDINATE.

PART 3 - EXECUTION

3.01 EXCAVATION AND BACKFILL

A. PERFORM EXCAVATION AND BACKFILL REQUIRED FOR ELECTRICAL INSTALLATION. RESTORE ALL SURFACES, ROADWAYS, WALKS, CURBS, WALLS, EXISTING UNDERGROUND INSTALLATIONS, ETC., CUT BY INSTALLATIONS TO ORIGINAL CONDITION IN AN ACCEPTABLE MANNER.

B. DIG TRENCHES STRAIGHT AND TRUE TO LINE AND GRADE, WITH BOTTOM SMOOTHED OF ANY ROCK POINTS. SUPPORT CONDUIT FOR ENTIRE LENGTH ON UNDISTURBED, ORIGINAL EARTH. MINIMUM CONDUIT DEPTH TO PIPE CROWN SHALL BE 24 INCHES BELOW FINISHED GRADE. CONSULT SERVING UTILITY COMPANIES FOR MINIMUM FACTORY INSTALL CONDUIT DEPTHS.

C. BACKFILL AND TAMP IN SIX-INCH LAYERS WITH EARTH FROM EXCAVATION TO FINISH GRADE. MAKE ALLOWANCES FOR SETTLEMENT.

3.02 INSTALLATIONS

A. CIRCUIT BREAKERS AND FUSES ARE TO BE INSTALLED IN ACCORDANCE WITH MANUFACTURERS' INSTRUCTIONS. FUSES MUST SEAT SOLIDLY WITH ALL CONTACT SURFACES BEARING EVENLY. REPLACE WARPED, WEAK, OR BROKEN FUSE CLAMP TERMINALS. DO NOT ATTEMPT TO REPAIR OR BEND BACK INTO POSITION.

3.03 SWITCHBOARD INSTALLATION

A. INSTALL A CONCRETE PAD THAT IS 3 INCHES HIGHER THAN SURROUNDING GRADE OR FLOOR, UNLESS NOTED ON PLAN. INSTALL ANCHORS FOR EACH SECTION PROVIDED. SET THE SWITCHBOARD IN POSITION AND LEVEL THE ENTIRE UNIT. RIGIDLY SECURE THE SWITCHBOARD TO THE PAD AND GROUT AROUND THE BASE AS REQUIRED TO MAKE WATERTIGHT SEAL. PROVIDE SUPPORT FOR CABLES ENTERING THE SWITCHBOARD AS REQUIRED FROM POINT OF ENTRY TO THE TERMINATION POINT.

B. WHERE THE SWITCHBOARD IS INSTALLED OUTDOORS AND EXPOSED TO THE WEATHER, FORM A 1/4" MINIMUM DRAIN PATH FROM EACH SECTION OF THE SWITCHBOARD INTERIOR TO GRADE LEVEL BEYOND THE PAD. THIS MAY BE ACCOMPLISHED BY PLACING A 1/4" PLASTIC OR COPPER TUBE WITHIN THE PAD FORM PRIOR TO CONCRETE POUR. SECURE THE TUBE AGAINST MOVEMENT DURING THE POUR. CUT TUBES OFF FLUSH WITH PAD AFTER SWITCHBOARD IS SET.

C. THE GROUND FAULT COMPONENTS SHALL BE TESTED BY A QUALIFIED TECHNICIAN PRIOR TO ENERGIZING SWITCHBOARD.

D. NEATLY ARRANGE WIRING WITHIN THE EQUIPMENT. BUNDLE AND WRAP CONDUCTORS #8 AWG AND SMALLER WITH PLASTIC WIRE TIES.

E. EVERY CONDUIT ENTERING THE SWITCHBOARD SHALL BE IDENTIFIED, AND 100% ACCESSIBLE WITH INSULATED BUSHING INSTALLED.

F. FIELD ADJUSTMENTS:

1. THE CONTRACTOR SHALL PERFORM FIELD ADJUSTMENTS OF THE PROTECTIVE DEVICES AS REQUIRED TO PLACE THE EQUIPMENT IN FINAL OPERATING CONDITION. THE SETTINGS SHALL BE IN ACCORDANCE WITH THE ACCEPTED SHORT-CIRCUIT STUDY, PROTECTIVE DEVICE EVALUATION STUDY, AND PROTECTIVE DEVICE COORDINATION STUDY.

2. NECESSARY FIELD SETTINGS OF DEVICES, ADJUSTMENTS, AND MINOR MODIFICATIONS TO EQUIPMENT TO ACCOMPLISH CONFORMANCE WITH AN ACCEPTED SHORT CIRCUIT AND PROTECTIVE DEVICE COORDINATION STUDY SHALL BE CARRIED OUT BY THE CONTRACTOR AT NO ADDITIONAL COST TO THE OWNER.

3.04 PANELBOARD INSTALLATION

A. PANELBOARDS ARE TO BE INSTALLED PLUMB AND RIGIDLY SECURED TO STRUCTURE WITH WOOD SCREWS, MACHINE BOLTS AND CONCRETE ANCHORS, OR MACHINE BOLTS AND LOCKNUTS AS APPLICABLE.
INSTALL WITH TOP OF PANELBOARD AT 6'-6" ABOVE FLOOR..

B. NAME PLATES SHALL BE INSTALLED AS INDICATED IN THIS SECTION.

C. RECESSED PANELBOARDS SHALL HAVE COVERS FLUSH WITH THE WALL. INSTALL 1-SPARE 3/4" EMPTY CONDUIT FOR EACH (3) SINGLE POLE SPACES OR SPARE CIRCUIT BREAKER POLES. STUB AND CAP IN ACCESSIBLE ATTIC SPACE, ABOVE THE CEILING, OR BELOW THE FLOOR AS APPLICABLE. WHERE BOTH ACCESSIBLE FLOOR AND ATTIC SPACES ARE AVAILABLE, STUB SPARE CONDUITS HALF EACH WAY (ONE EACH WAY MINIMUM). IDENTIFY SPARE CONDUITS. WHERE BUILDING CONSTRUCTION IS FIRE RATED, ENCLOSE RECESSED PANEL IN 5/8" GYPSUM BOARD AS DIRECTED BY THE ARCHITECT.

D. COORDINATE FRAMING REQUIREMENTS WITH OTHERS TO ACCOMMODATE PANELBOARD LOCATIONS WITHOUT REQUIRING FRAMING MEMBERS TO BE CUT AWAY FOR INSTALLATION. PROVIDE ADEQUATE BLOCKING FOR SURFACE MOUNTED PANELBOARDS AS APPLICABLE.

3.05 RACEWAY INSTALLATION

A. CONDUIT APPLICATION:

1. MINIMUM SIZE OF CONDUIT SHALL BE 1/2 INCH. IN NO CASE SHALL THE CONDUIT SIZE BE SMALLER THAN THAT SHOWN ON THE DRAWINGS.

2. PVC CONDUIT, MINIMUM SIZE 1", MAY ONLY BE INSTALLED BENEATH GRADE OR IN CONCRETE; A MAXIMUM OF 4 FEET. PVC MAY BE INSTALLED IN ELECTRICAL ROOMS OR CONCEALED IN STUD SPACES WHEN DESIGNATED ON PLANS. PVC SHALL NOT BE INSTALLED IN FIRE RATED AREAS OR WHERE SUBJECT TO MECHANICAL DAMAGE. THE PVC IS TO EXTEND ONLY FROM THE CONCRETE SLAB TO THE BOTTOM OF THE SWITCHBOARD, PANELBOARD, OR SIMILAR EQUIPMENT. (CEC 300.5, 300.50, AND CEC 352).

3. ALL CONDUIT RUNS EXPOSED ABOVE GRADE AND UP TO 8 FEET BELOW SHALL BE RIGID STEEL OR IMC., EXCEPT AS NOTED IN CONDUIT APPLICATIONS ITEMS 2 AND 4.

4. ELECTRICAL METALLIC TUBING (EMT) MAY BE INSTALLED IN PROTECTED ATTIC SPACES AND HOLLOW STUD SPACES. IT MAY BE EXPOSED ON THE SURFACE OF ELECTRICAL AND MECHANICAL ROOMS WHERE DESIGNATED ON THE PLANS.

5. FLEXIBLE METALLIC CONDUIT (MAXIMUM 6 FEET LENGTH) SHALL BE USED ONLY WHERE REQUIRED FOR CONNECTION TO MOTORS, ETC., OR WITH THE APPROVAL OF THE OWNER WHERE ABSOLUTELY NECESSARY DUE TO STRUCTURAL CONDITIONS.

6. BOXES INSTALLED INDOORS OR EMBEDDED IN CONCRETE SHALL BE GALVANIZED STEEL TYPE. BOXES INSTALLED EXPOSED OR OUTDOORS SHALL BE GALVANIZED CAST STEEL WITH THREADED HUBS.

7. CONDUIT FOR POWER COMPANY 12 KV PRIMARY LINES SHALL BE INSTALLED 54" BELOW GRADE.

8. BRANCH CIRCUIT CONDUITS UNDER SLAB SHALL BE SEPARATED BY AT LEAST ONE INCH. IN ALL CASES TWO OR MORE CONDUITS INSTALLED IN A COMMON CONCRETE ENCASEMENT SHALL BE SEPARATED BY AT LEAST THREE INCHES.

9. CONDUIT SHALL BE SECURELY FASTENED IN PLACE SO THAT ABSOLUTELY NO SHIFTING WILL OCCUR DURING PLACING OF CONCRETE ENCASEMENT.

10. JOINTS IN ALL CONDUIT INSTALLED IN CONCRETE, OR EXPOSED TO WEATHER, SHALL BE LIQUID AND GAS TIGHT.

B. CONDUIT LOCATION:

1. ALL CONDUITS SHALL BE RUN CONCEALED IN ALL FINISHED AREAS.

2. EXPOSED CONDUIT SHALL BE NEATLY INSTALLED PARALLEL TO OR AT RIGHT ANGLES TO THE STRUCTURAL MEMBERS.

3. EXPOSED CONDUIT STUBBING UP THROUGH THE FLOOR INTO THE BOTTOM OF EXPOSED PANELS, CABINETS OR EQUIPMENT SHALL BE LINED UP, PROPERLY SPACED AND SHALL BE STRAIGHT AND PLUMB. CONDUITS SHALL BE INSTALLED AT SUFFICIENT DEPTH BELOW THE FLOOR TO ELIMINATE ANY PART OF THE BEND ABOVE.

4. MAINTAIN 12-INCH SEPARATION BETWEEN POWER AND INTERCOMMUNICATION CABLES.

5. CONDUIT SHALL BE KEPT AT LEAST 6" FROM THE COVERING ON HOT WATER PIPES, AND 18" FROM THE COVERING ON FLUES AND BREECHINGS.

C. CONDUIT SUPPORT:

1. CONDUIT SHALL BE SUPPORTED WITH FACTORY MADE PIPE STRAPS OR SUSPENDED WITH PIPE HANGERS OR RACKS.

2. HANGER STRAPS, RODS, OR PIPE SUPPORTS UNDER WOOD SHALL BE ATTACHED TO THE WOOD STRUCTURE USING BOLTS, LAG BOLTS, OR LAG SCREWS. ATTACH TO TRUSSES USING BEAM CLAMPS.

3. CONDUITS, WHICH ARE SUSPENDED ON RODS MORE THAN 2 FEET LONG SHALL BE RIGIDLY BRACED TO PREVENT HORIZONTAL MOTION OR SWAYING.

4. CONDUIT SHALL BE SUPPORTED AT INTERVALS NOT EXCEEDING 10 FEET AND IN ALL CASES WITH A SUPPORT NOT MORE THAN 3 FEET FROM THE OUTLET AND AT ANY POINT WHERE IT CHANGES IN DIRECTION.

5. PERFORATED STRAP AND PLUMBER'S TAPE SHALL NOT BE USED IN THE SUPPORT OF CONDUITS.

6. CONDUIT PLACED AGAINST CONCRETE OR MASONRY ABOVE GROUND SHALL BE FASTENED TO THE CONCRETE WITH PIPE STRAPS OR ONE-SCREW CONDUIT CLAMPS ATTACHED TO THE CONCRETE BY MEANS OF EXPANSION ANCHORS AND SCREWS. EXPANDERS AND SHIELDS SHALL BE STEEL OR MALLEABLE IRON. SIZES OF SHIELDS AND BOLTS SHALL BE SUCH THAT THE PROOF TEST LOAD WILL NOT BE LESS THAN FOUR TIMES THE ACTUAL WORKING LOAD.

D. CONDUIT BENDS:

1. FIELD BENDS OR OFFSETS ARE PERMITTED IN 1 INCH AND SMALLER CONDUIT ONLY.

2. ELBOWS IN 1-1/4 INCH CONDUIT AND LARGER SIZES SHALL BE FACTORY MADE.

3. MINIMUM RADIUS BEND FOR TELEPHONE SERVICE ENTRANCE CONDUIT SHALL BE 36". SEE TECHNOLOGY DRAWINGS TO VERIFY AND COORDINATE.

4. CONDUIT BENDS, OTHER THAN FACTORY ELBOWS, SHALL HAVE A RADIUS OF NOT LESS THAN 10 TIMES THE INTERNAL DIAMETER OF THE CONDUIT.

5. 90 DEGREE BENDS IN PVC LARGER THAN 2 INCHES SHALL BE STEEL.

6. USE OF A BLOW TORCH TO BEND CONDUIT IS SPECIFICALLY PROHIBITED.

E. EMPTY CONDUITS: ALL CONDUITS, WHICH ARE INSTALLED AT THIS TIME AND LEFT EMPTY FOR FUTURE USE OR WHERE CONDUCTORS ARE TO BE INSTALLED BY A REPRESENTATIVE OF THE TELEPHONE COMPANY SHALL HAVE A 3/16 INCH POLYPROPYLENE ROPE LEFT IN PLACE FOR FUTURE USE.

F. CONDUIT PROTECTION:

1. CAP ALL CONDUIT DURING CONSTRUCTION BY MEANS OF MANUFACTURED SEALS. SWAB OUT ALL CONDUITS BEFORE PULLING IN WIRE.

2. ALL CONDUIT SYSTEMS MUST BE INSTALLED COMPLETE BEFORE CONDUCTORS ARE PULLED IN.

G. OUTLET BOXES:

1. BOXES MUST BE ACCURATELY PLACED FOR FINISH, INDEPENDENTLY AND SECURELY SUPPORTED BY MANUFACTURED BOX HANGERS. FIXTURE OUTLETS SHALL BE LOCATED SYMMETRICALLY.

2. LOCAL SWITCHES SHALL BE LOCATED +46 INCHES ABOVE THE FLOOR (TOP OF BOX) UNLESS OTHERWISE NOTED.

3. CONVENIENCE OUTLETS SHALL BE LOCATED +16 INCHES ABOVE THE FINISHED FLOOR (BOTTOM OF BOX) UNLESS OTHERWISE NOTED.

4. TO INTERFERENCE WITH STRUCTURE, PIPES, DUCTS, ETC. SHALL BE REPORTED TO THE OWNER FOR APPROVAL.

5. ALL BOXES SHALL BE OF PROPER CODE SIZE FOR THE NUMBER OF WIRES OR CONDUITS PASSING THROUGH OR TERMINATING THEREIN, BUT IN NO CASE SHALL ANY BOX BE LESS THAN 4" SQUARE, UNLESS SPECIFICALLY NOTED AS SMALLER. COVERS SHALL BE OF THE TYPES MOST SUITABLE FOR THE FIXTURE OR DEVICE USED AT THE OUTLET, AND SHALL FINISH FLUSH WITH PLASTER OR OTHER FINISHED SURFACE. APPROVED FACTORY MADE KNOCKOUT SEALS SHALL BE USED IN ALL BOXES WHERE KNOCKOUTS ARE NOT INTACT. BOXES IN CONCRETE SHALL BE A TYPE, WHICH WILL ALLOW THE PLACING OF CONDUIT WITHOUT DISPLACING THE REINFORCING BARS.

6. OUTLET BOXES SHALL BE USED AS PULL BOXES WHEREVER POSSIBLE, AND JUNCTION OR PULL BOXES SHALL BE INSTALLED ONLY AS REQUIRED BY THE SPECIFICATIONS, OR AS DIRECTED.

7. FOR LIGHT OUTLET BOXES USE MINIMUM OF 4" SQUARE, 1-1/2" DEEP, EQUIPPED WITH PLASTER RING AND FIXTURE SUPPORTING DEVICE AS REQUIRED BY THE UNIT.

8. FOR WALL SWITCH OUTLETS, USE 4" BOXES WITH SINGLE OR TWO GANG PLASTER RINGS FOR ONE OR TWO SWITCHES AND SOLID GANG BOXES WITH GANG PLASTER RINGS FOR MORE THAN TWO SWITCHES, UNLESS NOTED OTHERWISE ON THE DRAWINGS.

9. FOR CONVENIENCE OUTLETS, USE 4" BOXES WITH SINGLE GANG PLASTER RING.

10. FOR TELEPHONE OUTLETS, USE 4" BOXES WITH SINGLE GANG PLASTER RING. SEE TECHNOLOGY DRAWINGS TO VERIFY AND COORDINATE.

3.06 WIRE INSTALLATION

A. CLEANING:

1. ALL DEBRIS AND MOISTURE SHALL BE REMOVED FROM RACEWAYS, BOXES, AND CABINETS BEFORE INSTALLING WIRE OR CABLE.

B. PULLING:

1. NO OIL, GREASE OR SIMILAR SUBSTANCES SHALL BE USED TO FACILITATE THE PULLING IN OF CONDUCTORS. USE A UL APPROVED WIRE PULLING COMPOUND.

2. NO WIRE OR CABLE SHALL BE PULLED IN UNTIL ALL CONSTRUCTION, WHICH MIGHT DAMAGE INSULATION OR FILL CONDUIT WITH FOREIGN MATERIAL IS COMPLETED.

3. WIRE SHALL BE PULLED INTO CONDUITS WITH CARE TO PREVENT DAMAGE TO INSULATION. USE BASKET PULLING GRIPS TO AVOID SLIPPING OF INSULATION ON CONDUCTORS. NYLON ROPE OR OTHER "SOFT" SURFACE CABLE MUST BE USED FOR PULLING IN CONDUITS OTHER THAN STEEL.

C. CONNECTIONS:

1. STRANDED CONDUCTORS NO. 8 AND SMALLER SHALL BE TERMINATED WITH TERMINALS OF APPROPRIATE SIZE WHERE CONNECTED TO SCREW TYPE LUGS.

2. JOINTS, SPLICES AND TAPS IN DRY LOCATIONS FOR CONDUCTORS NO. 8 AND SMALLER SHALL BE MADE WITH TWIST ON CONNECTORS SUITABLY SIZED FOR THE NUMBER AND GAUGE OF THE CONDUCTORS.

3. FURNISH AND INSTALL PROPER LUGS IN ALL PANELBOARDS, SWITCHBOARDS, AND GUTTERS AS REQUIRED TO PROPERLY TERMINATE EVERY CABLE. LUGS FOR ALUMINUM CONDUCTORS SHALL BE COMPRESSION TYPE.

4. CONNECTIONS OF ALUMINUM CABLE TO ALUMINUM BUS BARS SHALL BE MADE USING ALL ALUMINUM COMPONENTS (LUGS, WASHER, BOLTS, NUTS). COPPER TO ALUMINUM CONNECTIONS OF BUS BARS AND LUGS SHALL BE MADE USING BELLEVILLE WASHERS AND FLAT WASHERS TO COMPENSATE FOR DIFFER